TAP800 Series

800 Watt Heat Sinkable Planar

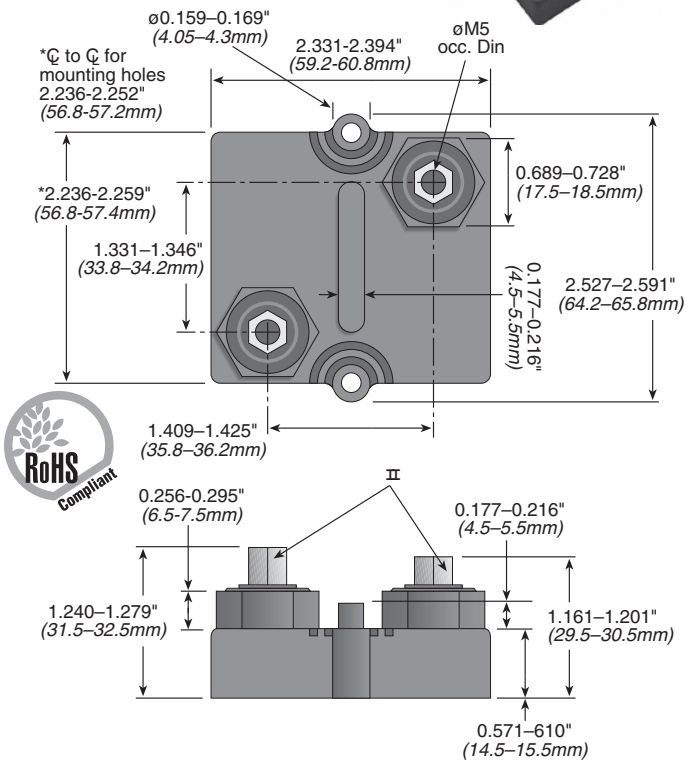

Ohmite's TAP800 Series dissipates 800 watts of power when used with a liquid or air cooled heat sink system. The TAP800 rounds out 600 watt (TAP600) and 1000 watt (TAP1000) product offerings. Applications include variable speed drives, power supplies, robotics, motor control, control devices, and other power designs.

FEATURES

- Electric support is high alumina content ceramic metallized on the bottom for ideal heat transfer and optimum discharge.
- Encapsulated with a special resin filled epoxy casing with a large creepage distance to mass, large air distance between terminals, and a high insulation resistance (CTI 600).
- Resistive element is specially designed for low inductance and capacitance. The element provides stable performance in addition to high wattage and pulse loading capability.
- Contacts allow for easy load connection with M5 screws (not included) available with M4 as special request. Thread depth 7mm
- Materials meet the requirements of UL94-V0

SPECIFICATIONS

Electrical

Resistance Values: 0.25Ω to 10KΩ

- **Resistance Tolerance:** ±5% to ±10%
- **Temperature Coefficient:** ±150ppm/°C (others upon request)
- **Maximum Working Voltage:** 5,000V DC, higher voltage on request, not exceeding max. power
- **Short Time Overload:** 1,200W at 70°C for 10sec., ΔR=0.4% max.
- **Power Rating:** 800W at 85°C Bottom case temperature.
- **Peak Current:** up to 1500 amp. depending on pulse length and frequency Please ask for details
- **Electric Strength Voltage:** 6kVrms, 50Hz,upto 12kVrms on special request.
- **Single Shot Voltage:** up to 12kV Normwave (1.5/50 µsec)
- **Partial Discharge:**4KVrms, <10pC, up to 7kV on special request; not available in high-current
- **Insulation Resistance:** 10GΩ min. at 500V
- **Creeping Distance:** 42mm min.
- **Air Distance:** 14mm min.
- **Inductance:** 80nH
- **Capacity/Mass:** 110pF
- **Capacity/Parallel:** 40pF
- **Operation Temperature:** -55°C to +150°C
- **Max. Torque for Contacts:** 2 Nm
- **Max. Torque for Mounting:** 1.8 Nm M4 screws (not included)

Derating: 8.73W/°K (0.115°K/W)

Power Rating: 800W at 85°C bottom case temp. This value is only valid by using a thermal conduction to the heatsink R_{th}-cs<0.025°K/W. This value can be reached by using thermal transfer compound with a heat conductivity of 1W/mK. The flatness of the cooling plate must be better than 0.05mm overall. The roughness of the surface should not exceed 6.4µm.

PERFORMANCE DATA

Test	Method	Typical Results - ΔR
Short time overload	1,000 W/10sec	0.4%
Humidity Steady State	56 days/40°C/95%	0.25%
Temp. Cycling	-55/+125/5 cycles	0.20%
Shock	40g/4,000 times	0.25%
Vibration	2-500Hz/10g	0.25%
Load Life	Pn 30 min. on/30 min off, 1,000cyl	0.40%
Terminal Strength	200N	0.05%

STANDARD VALUES

0.10	1.0	100	1000
0.25	5.0	220	2700
0.33	10	390	3000
0.50	15	500	5000
	50	680	10,000

DERATING CURVE

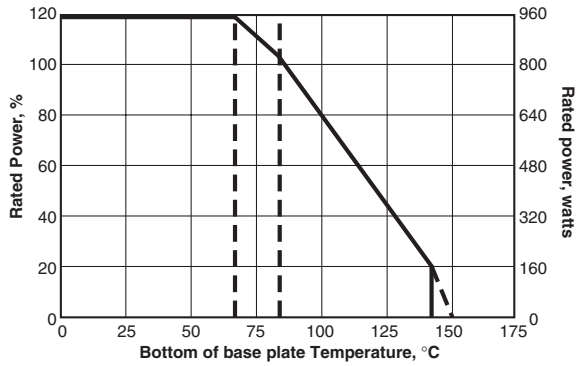

ORDERING INFORMATION

RoHS compliant
Non-compliant version unavailable

TAP800K5R0E

Style	Wattage	Tolerance	Resistance
	800 watts	J = 5% K = 10%, Std. L = 20%	1 Ohm = 1R0 10 Ohm = 10R 1000 Ohm = 1K0

Check product availability at **www.ohmite.com**

THIS PRODUCT IS DESIGNED FOR USE WITH PROPER HEATSINKING.
Maximum base plate temperature of the resistor must be monitored and kept within specified limits to establish the power rating. Best technique is to attach a thermocouple to the side of the base plate of the resistor. Temperature of plastic housing or heat sink cannot be used to establish rating of the resistor.

www.BDTIC.com/OHMITE