PRESS FIT AUTOMOTIVE RECTIFIER (LUCAS)

LPR351 THRU LPR356

VOLTAGE RANGE	**100 to 600 Volts**
CURRENT	**35.0 Amperes**

TECHNICAL SPECIFICATION:

FEATURES

- Low Leakage
- Low forward voltage drop
- High current capability
- High forward surge current capacity

MECHANICAL DATA

- Technology: Cell with Vacuum soldered
- Case: Copper case
- Polarity: As marked of case bottom
- Lead: Plated lead , solderable per MIL-STD-202E method 208C
- Mounting: Press Fit
- Weight: 0.23 ounces, 6.58 grams

LC-1

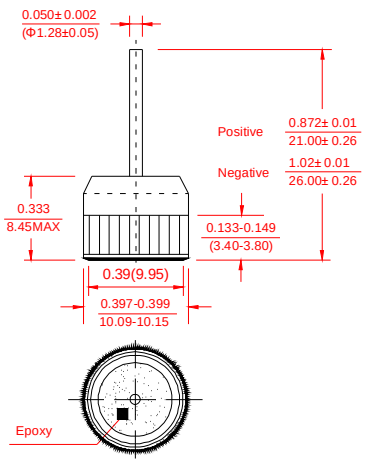

Dimensions in inches and (millimeters)

MAXIMUM RATINGS AND ELECTRICAL CHARACTERISTICS

- Ratings at 25℃ ambient temperature unless otherwise specified
- Single Phase, half wave, 60HZ, resistive or inductive load
- For capacitive load derate current by 20%

	SYMBOLS	LPR351	LPR352	LPR353	LPR354	LPR356	UNIT
Maximum Repetitive Peak Reverse Voltage	V_{RRM}	100	200	300	400	600	Volts
Maximum RMS Voltage	V_{RMS}	70	140	210	280	420	Volts
Maximum DC Blocking Voltage	V_{DC}	100	200	300	400	600	Volts
Maximum Average Forward Rectified Current, At Tc=105℃	$I_{(AV)}$	35					Amps
Peak Forward Surge Current 3.3mS single half sine wave superimposed on Rated load (JEDEC method)	I_{FSM}	500					Amps
Rating for fusing (t<8.3ms)	I^2t	1038					A^2S
Maximum instantaneous Forward Voltage at 100A	V_F	1.08					Volts
Maximum DC Reverse Current at Rated DC Blocking Voltage TA=25℃	I_R	5.0					UA
TA=100℃		450					
Typical Thermal Resistance	$R_{\theta JC}$	0.8					℃/W
Operating and Storage Temperature Range	T_J,T_{STG}	(-65 to +175)					℃

Notes:

1. Enough heatsink must be considered in application.

www.BDTIC.com/MIC

PRESS FIT AUTOMOTIVE RECTIFIER (LUCAS)

LPR351 THRU LPR356

VOLTAGE RANGE	100 to 600 Volts
CURRENT	35.0 Amperes

RATINGS AND CHARACTERISTIC CURVES LPR351 THRULPR356

F1G.1 TYPICAL FORWARD CURRENT DERATING GURVE

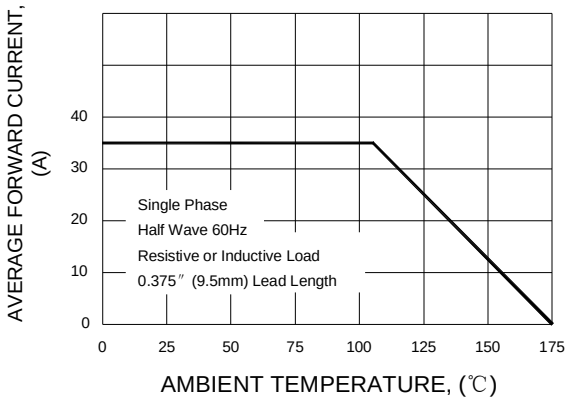

F1G.2 MAXIMUM NON-REPETITIVE PEAK FORWARD SURGE CURRENT

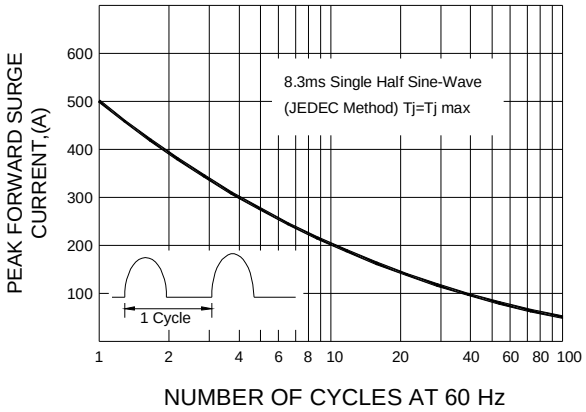

F1G.3 TYPICAL INSTANTANEOUS FORWARD CHARACTERISTICS

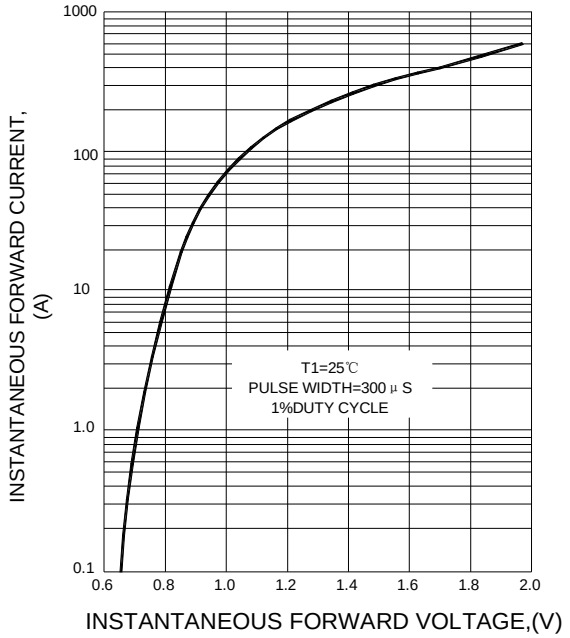

F1G.4 FORWARD ROWER DISSIPATION

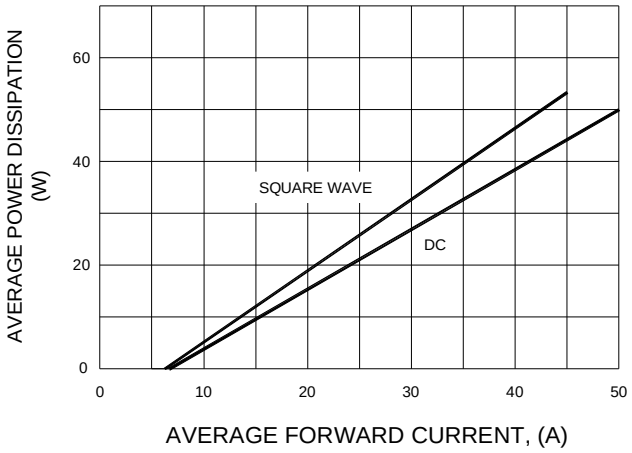

E-mail: sales@cnmic.com Web Site: www.cnmic.com

www.BDTIC.com/MIC