250 Series

'Thin' Stackohm® Vitreous Enamel Power

When limited space is a consideration, choose Ohmite's "thin" stackable 250 Type resistors. These oval-shaped ceramic-core resistors feature a low profile to permit installation in spaces with height restrictions. They are also equipped with integral mounting brackets so they can be fastened to a chassis and stacked in locations with limited surface area.

When properly fastened, the mounting brackets add a heat sinking benefit resulting in a smaller size per watt. Durable 250 Type resistors are fully welded and coated with lead free vitreous enamel.

FEATURES

- Small size-to-power ratio.
- Stackable
- Integral mounting bracket conducts heat to mounting surface.
- Low profile for use in equipment where space is limited.
- All-welded construction.
- RoHS compliant product available. Add "E" suffix to part number to specify.

SPECIFICATIONS

Material

Coating: Lead free vitreous enamel.

Core: Ceramic.

Terminals: Tinned lug with hole. RoHS solder composition is 96% Sn, 3.5% Ag, 0.5% Cu

Derating: Linearly from 100% @ +25°C to 0% @ +350°C.

Electrical

Tolerance: ±5% (J)

Power rating: Based on mounting a single resistor on a metal surface measuring 10" (254mm) square by 0.04" (1.016mm) thick. Reduce rating by 15% when mounting on non-metallic surface.

Overload: 10x rated wattage for 5 seconds if max. voltage is not exceeded.

Temperature coefficient: 1 to 20Ω: ±400 ppm/°C. Over 20Ω: ±260 ppm/°C

Dielectric withstanding voltage: 500 VAC: 10 and 20 watt rating. 1000 VAC: 30, 40 and 55 watt rating (measured from lug to mounting bracket)

To calculate max. amps: use the formula $\sqrt{P/R}$

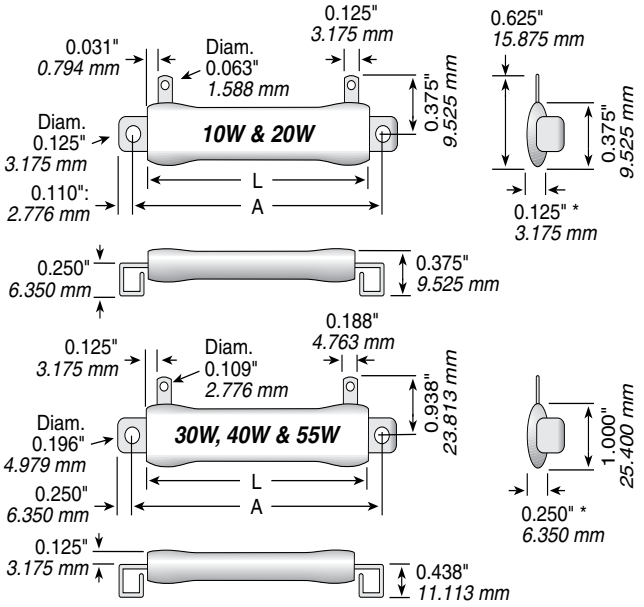

*Reference dimension only; varies according to resistance value.

Note: When resistors are stacked, use washers or spacers as required to insure clearance and improve power dissipation.

Series	Wattage	Ohms	Dimensions (in. / *mm*) Length L	Length A	Max. Voltage*
F10	10	1.0-15K	0.750 / *19.050*	1.000 / *25.400*	187
F20	20	1.0-50K	2.000 / *50.800*	2.313 / *58.750*	815
F30	30	1.0-10K	1.250 / *31.750*	2.000 / *50.800*	281
F40	40	1.0-25K	2.000 / *50.800*	2.750 / *69.850*	655
F55	55	1.0-30K	3.500 / *88.900*	4.250 / *107.950*	1405

Adjustable versions available. Consult Ohmite.
Other sizes available. Consult Ohmite.
Also available in low cost Centohm or Silicone coating. Consult Ohmite.
* Maximum Voltage is based on Ohm's Law [$V=\sqrt{P*R}$] as limited by the resistance value of specified product

ORDERING INFO

Series — RoHS Compliant

■ F 2 0 J 1 R 0 E

Coating	Wattage	Tolerance	Ohms
Blank = Vitreous		F = 1%	1R0 = 1 Ω
C = Centohm		H = 3%	250 = 250 Ω
S = Silicone		J = 5%	1K0 = 1,000 Ω
		K = 10%	25K = 25,000 Ω
			25K5 = 25,500 Ω

MADE-TO-ORDER PARTS

See website for custom core info

Terminal Type — *See "Resistor Terminals for Tubular Cores"*

Tolerance — *J = 5%*

RoHS Compliant

2 5 3 0 T E 5 7 B 1 R 0 0 J E

Series
Vitreous enamel:
25 = 250 Fixed
26 = 260 Adjustable
Silicone ceramic:
45 = 450 Fixed
46 = 460 Adjustable

Wattage & Core Code
See "Core and Terminal Selection"

Mounting Brackets
(user supplies bracket for core TB)
B = Stacking box
S = Stacking stud, std. height
H = Stacking stud high
U = Unit type

Ohms
Example:
1R00 = 1 Ω
250R = 250 Ω
1K00 = 1,000 Ω
25K0 = 25,000 Ω
25K5 = 25,500 Ω

STANDARD PART NUMBERS FOR 250 SERIES

Ohmic value	Part No. (Prefix ➤ / Suffix ▼)	Wattage 10 F10J	20 F20J	30 F30J	40 F40J	55 F55J
1	1R0E	✔	✔	✔	✔	✔
1.5	1R5E			✔	✔	✔
2	2R0E	✔	✔	✔	✔	✔
3	3R0E			✔	✔	✔
4	4R0E				✔	✔
5	5R0E	✔	✔	✔	✔	✔
7.5	7R5E	✔			✔	✔
10	10RE	✔	✔		✔	✔
15	15RE	✔	✔	✔		
20	20RE	✔				
25	25RE	✔	✔	✔	✔	✔
30	30RE	✔				
40	40RE					✔

Ohmic value	Part No. (Prefix ➤ / Suffix ▼)	Wattage 10 F10J	20 F20J	30 F30J	40 F40J	55 F55J
50	50RE	✔		✔	✔	✔
75	75RE			✔		✔
100	100E	✔	✔	✔	✔	✔
150	150E		✔			
200	200E	✔		✔	✔	✔
250	250E		✔	✔	✔	✔
300	300E		✔			
400	400E	✔			✔	✔
500	500E	✔	✔	✔	✔	✔
750	750E			✔	✔	
800	800E		✔			
1,000	1K0E	✔	✔	✔	✔	✔
1,250	1K25E	✔	✔			

Ohmic value	Part No. (Prefix ➤ / Suffix ▼)	Wattage 10 F10J	20 F20J	30 F30J	40 F40J	55 F55J
1,500	1K5E	✔	✔	✔		✔
2,000	2K0E		✔		✔	✔
2,500	2K5E	✔	✔	✔	✔	✔
3,000	3K0E	✔		✔	✔	✔
4,000	4K0E			✔		✔
5,000	5K0E		✔			
6,000	6K0E					
7,500	7K5E		✔			
10,000	10KE				✔	✔
15,000	15KE				✔	
20,000	20KE				✔	
25,000	25KE				✔	
40,000	40KE		✔			

✔ = Standard values; check availability using the worldwide inventory search at www.ohmite.com

www.BDTIC.com/OHMITE