- **Input Offset Voltage Drift . . . Typically 0.1 μV/Month, Including the First 30 Days**
- **Wide Range of Supply Voltages Over Specified Temperature Range:**
  - **0°C to 70°C . . . 3 V to 16 V**
  - **–40°C to 85°C . . . 4 V to 16 V**
  - **–55°C to 125°C . . . 5 V to 16 V**
- **Single-Supply Operation**
- **Common-Mode Input Voltage Range Extends Below the Negative Rail (C-Suffix and I-Suffix Types)**
- **Low Noise . . . 25 nV/√Hz Typically at f = 1 kHz (High-Bias Mode)**
- **Output Voltage Range Includes Negative Rail**
- **High Input Impedance . . . 10^{12} Ω Typ**
- **ESD-Protection Circuitry**
- **Small-Outline Package Option Also Available in Tape and Reel**
- **Designed-In Latch-Up Immunity**

D, JG, OR P PACKAGE
(TOP VIEW)

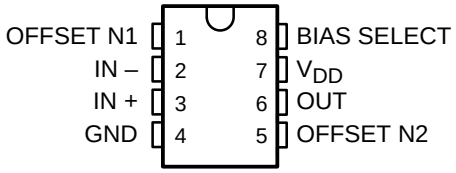

FK PACKAGE
(TOP VIEW)

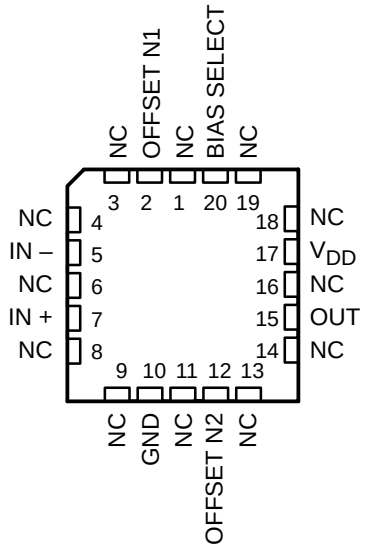

NC – No internal connection

description

The TLC271 operational amplifier combines a wide range of input offset voltage grades with low offset voltage drift and high input impedance. In addition, the TLC271 offers a bias-select mode that allows the user to select the best combination of power dissipation and ac performance for a particular application. These devices use Texas Instruments silicon-gate LinCMOS™ technology, which provides offset voltage stability far exceeding the stability available with conventional metal-gate processes.

AVAILABLE OPTIONS

T_A	V_{IO}max AT 25°C	PACKAGE			
		SMALL OUTLINE (D)	CHIP CARRIER (FK)	CERAMIC DIP (JG)	PLASTIC DIP (P)
0°C to 70°C	2 mV 5 mV 10 mV	TLC271BCD TLC271ACD TLC271CD	—	—	TLC271BCP TLC271ACP TLC271CP
–40°C to 85°C	2 mV 5 mV 10 mV	TLC271BID TLC271AID TLC271ID	—	—	TLC271BIP TLC271AIP TLC271IP
–55°C to 125°C	10 mV	TLC271MD	TLC271MFK	TLC271MJG	TLC271MP

The D package is available taped and reeled. Add R suffix to the device type (e.g., TLC271BCDR).

Please be aware that an important notice concerning availability, standard warranty, and use in critical applications of Texas Instruments semiconductor products and disclaimers thereto appears at the end of this data sheet.

LinCMOS is a trademark of Texas Instruments.

PRODUCTION DATA information is current as of publication date. Products conform to specifications per the terms of Texas Instruments standard warranty. Production processing does not necessarily include testing of all parameters.

Copyright © 2001, Texas Instruments Incorporated

www.BDTIC.com/TI

DEVICE FEATURES

PARAMETER†	BIAS-SELECT MODE			UNIT
	HIGH	MEDIUM	LOW	
P_D	3375	525	50	µW
SR	3.6	0.4	0.03	V/µs
V_n	25	32	68	nV/√Hz
B_1	1.7	0.5	0.09	MHz
A_{VD}	23	170	480	V/mV

† Typical at V_{DD} = 5 V, T_A = 25°C

description (continued)

Using the bias-select option, these cost-effective devices can be programmed to span a wide range of applications that previously required BiFET, NFET, or bipolar technology. Three offset voltage grades are available (C-suffix and I-suffix types), ranging from the low-cost TLC271 (10 mV) to the TLC271B (2 mV) low-offset version. The extremely high input impedance and low bias currents, in conjunction with good common-mode rejection and supply voltage rejection, make these devices a good choice for new state-of-the-art designs as well as for upgrading existing designs.

In general, many features associated with bipolar technology are available in LinCMOS™ operational amplifiers, without the power penalties of bipolar technology. General applications such as transducer interfacing, analog calculations, amplifier blocks, active filters, and signal buffering are all easily designed with the TLC271. The devices also exhibit low-voltage single-supply operation, making them ideally suited for remote and inaccessible battery-powered applications. The common-mode input voltage range includes the negative rail.

A wide range of packaging options is available, including small-outline and chip-carrier versions for high-density system applications.

The device inputs and output are designed to withstand –100-mA surge currents without sustaining latch-up.

The TLC271 incorporates internal ESD-protection circuits that prevent functional failures at voltages up to 2000 V as tested under MIL-STD-883C, Method 3015.2; however, care should be exercised in handling these devices as exposure to ESD may result in the degradation of the device parametric performance.

The C-suffix devices are characterized for operation from 0°C to 70°C. The I-suffix devices are characterized for operation from –40°C to 85°C. The M-suffix devices are characterized for operation over the full military temperature range of –55°C to 125°C.

bias-select feature

The TLC271 offers a bias-select feature that allows the user to select any one of three bias levels depending on the level of performance desired. The tradeoffs between bias levels involve ac performance and power dissipation (see Table 1).

Table 1. Effect of Bias Selection on Performance

TYPICAL PARAMETER VALUES T_A = 25°C, V_{DD} = 5 V		MODE			UNIT
		HIGH BIAS R_L = 10 kΩ	MEDIUM BIAS R_L = 100 kΩ	LOW BIAS R_L = 1 MΩ	
P_D	Power dissipation	3.4	0.5	0.05	mW
SR	Slew rate	3.6	0.4	0.03	V/µs
V_n	Equivalent input noise voltage at f = 1 kHz	25	32	68	nV/√Hz
B_1	Unity-gain bandwidth	1.7	0.5	0.09	MHz
ϕ_m	Phase margin	46°	40°	34°	
A_{VD}	Large-signal differential voltage amplification	23	170	480	V/mV

www.BDTIC.com/TI

bias selection

Bias selection is achieved by connecting the bias select pin to one of three voltage levels (see Figure 1). For medium-bias applications, it is recommended that the bias select pin be connected to the midpoint between the supply rails. This procedure is simple in split-supply applications, since this point is ground. In single-supply applications, the medium-bias mode necessitates using a voltage divider as indicated in Figure 1. The use of large-value resistors in the voltage divider reduces the current drain of the divider from the supply line. However, large-value resistors used in conjunction with a large-value capacitor require significant time to charge up to the supply midpoint after the supply is switched on. A voltage other than the midpoint can be used if it is within the voltages specified in Figure 1.

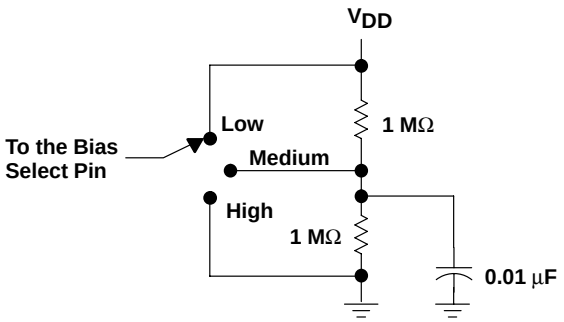

BIAS MODE	BIAS-SELECT VOLTAGE (single supply)
Low	V_{DD}
Medium	1 V to V_{DD} – 1 V
High	GND

Figure 1. Bias Selection for Single-Supply Applications

high-bias mode

In the high-bias mode, the TLC271 series features low offset voltage drift, high input impedance, and low noise. Speed in this mode approaches that of BiFET devices but at only a fraction of the power dissipation. Unity-gain bandwidth is typically greater than 1 MHz.

medium-bias mode

The TLC271 in the medium-bias mode features low offset voltage drift, high input impedance, and low noise. Speed in this mode is similar to general-purpose bipolar devices but power dissipation is only a fraction of that consumed by bipolar devices.

www.BDTIC.com/TI

low-bias mode

In the low-bias mode, the TLC271 features low offset voltage drift, high input impedance, extremely low power consumption, and high differential voltage gain.

ORDER OF CONTENTS

TOPIC	BIAS MODE
schematic	all
absolute maximum ratings	all
recommended operating conditions	all
electrical characteristics operating characteristics typical characteristics	high (Figures 2 – 33)
electrical characteristics operating characteristics typical characteristics	medium (Figures 34 – 65)
electrical characteristics operating characteristics typical characteristics	low (Figures 66 – 97)
parameter measurement information	all
application information	all

equivalent schematic

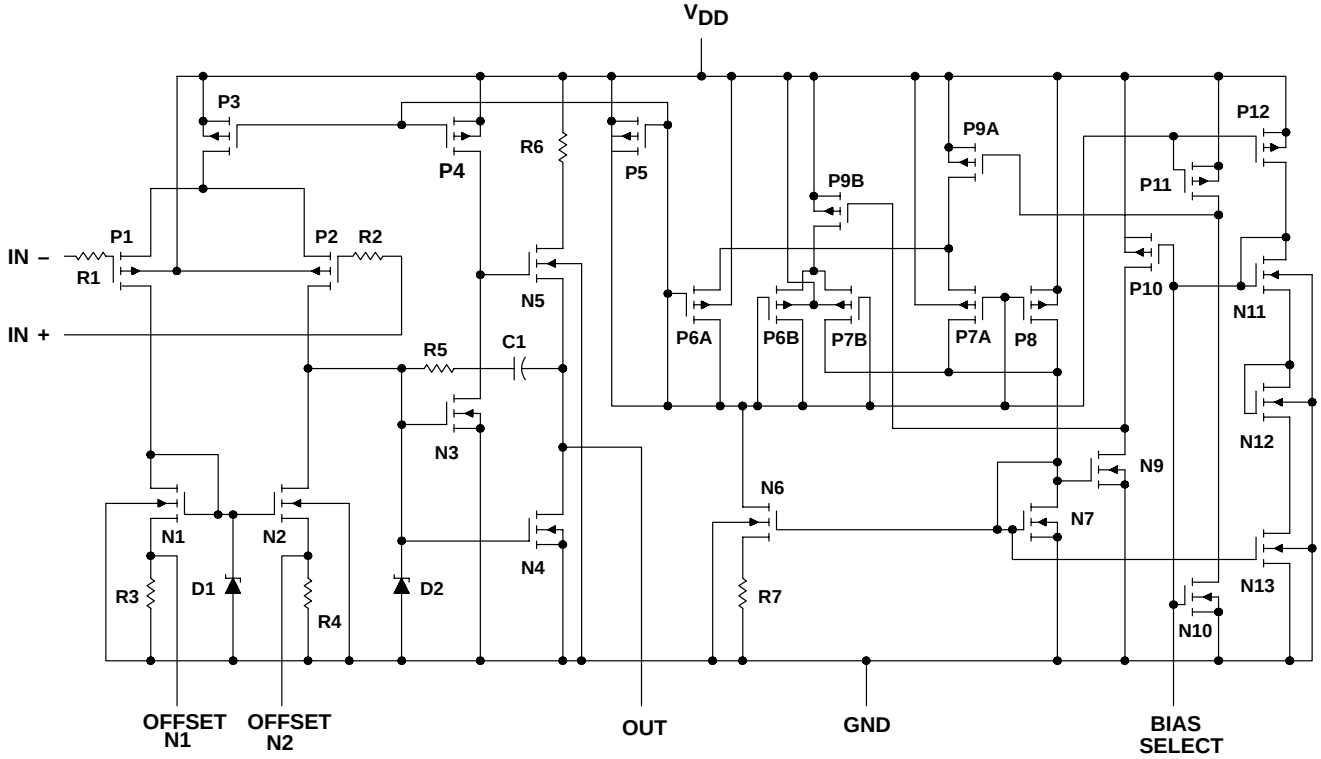

TEXAS INSTRUMENTS
POST OFFICE BOX 655303 • DALLAS, TEXAS 75265
www.BDTIC.com/TI

absolute maximum ratings over operating free-air temperature (unless otherwise noted)†

Supply voltage, V_{DD} (see Note 1) . . . . . 18 V
Differential input voltage, V_{ID} (see Note 2) . . . . . $\pm V_{DD}$
Input voltage range, V_I (any input) . . . . . –0.3 V to V_{DD}
Input current, I_I . . . . . ±5 mA
Output current, I_O . . . . . ±30 mA
Duration of short-circuit current at (or below) 25°C (see Note 3) . . . . . Unlimited
Continuous total dissipation . . . . . See Dissipation Rating Table
Operating free-air temperature, T_A: C suffix . . . . . 0°C to 70°C
I suffix . . . . . –40°C to 85°C
M suffix . . . . . –55°C to 125°C
Storage temperature range . . . . . –65°C to 150°C
Case temperature for 60 seconds: FK package . . . . . 260°C
Lead temperature 1,6 mm (1/16 inch) from case for 10 seconds: D or P package . . . . . 260°C
Lead temperature 1,6 mm (1/16 inch) from case for 60 seconds: JG package . . . . . 300°C

† Stresses beyond those listed under "absolute maximum ratings" may cause permanent damage to the device. These are stress ratings only, and functional operation of the device at these or any other conditions beyond those indicated under "recommended operating conditions" is not implied. Exposure to absolute-maximum-rated conditions for extended periods may affect device reliability.

NOTES: 1. All voltage values, except differential voltages, are with respect to network ground.
2. Differential voltages are at IN+ with respect to IN–.
3. The output may be shorted to either supply. Temperature and/or supply voltages must be limited to ensure that the maximum dissipation rating is not exceeded (see application section).

DISSIPATION RATING TABLE

PACKAGE	$T_A \le 25°C$ POWER RATING	DERATING FACTOR ABOVE $T_A = 25°C$	$T_A = 70°C$ POWER RATING	$T_A = 85°C$ POWER RATING	$T_A = 125°C$ POWER RATING
D	725 mW	5.8 mW/°C	464 mW	377 mW	145 mW
FK	1375 mW	11.0 mW/°C	880 mW	715 mW	275 mW
JG	1050 mW	8.4 mW/°C	672 mW	546 mW	210 mW
P	1000 mW	8.0 mW/°C	640 mW	520 mW	200 mW

recommended operating conditions

		C SUFFIX		I SUFFIX		M SUFFIX		UNIT
		MIN	MAX	MIN	MAX	MIN	MAX	
Supply voltage, V_{DD}		3	16	4	16	5	16	V
Common-mode input voltage, V_{IC}	$V_{DD} = 5$ V	–0.2	3.5	–0.2	3.5	0	3.5	V
	$V_{DD} = 10$ V	–0.2	8.5	–0.2	8.5	0	8.5	
Operating free-air temperature, T_A		0	70	–40	85	–55	125	°C

www.BDTIC.com/TI

HIGH-BIAS MODE

electrical characteristics at specified free-air temperature (unless otherwise noted)

PARAMETER			TEST CONDITIONS	T_A†	TLC271C, TLC271AC, TLC271BC						UNIT
					V_{DD} = 5 V			V_{DD} = 10 V			
					MIN	TYP	MAX	MIN	TYP	MAX	
V_{IO}	Input offset voltage	TLC271C	V_O = 1.4 V, V_{IC} = 0 V, R_S = 50 Ω, R_L = 10 kΩ	25°C		1.1	10		1.1	10	mV
				Full range			12			12	
		TLC271AC		25°C		0.9	5		0.9	5	
				Full range			6.5			6.5	
		TLC271BC		25°C		0.34	2		0.39	2	
				Full range			3			3	
α_{VIO}	Average temperature coefficient of input offset voltage			25°C to 70°C		1.8			2		µV/°C
I_{IO}	Input offset current (see Note 4)		$V_O = V_{DD}/2$, $V_{IC} = V_{DD}/2$	25°C		0.1	60		0.1	60	pA
				70°C		7	300		7	300	
I_{IB}	Input bias current (see Note 4)		$V_O = V_{DD}/2$, $V_{IC} = V_{DD}/2$	25°C		0.6	60		0.7	60	pA
				70°C		40	600		50	600	
V_{ICR}	Common-mode input voltage range (see Note 5)			25°C	–0.2 to 4	–0.3 to 4.2		–0.2 to 9	–0.3 to 9.2		V
				Full range	–0.2 to 3.5			–0.2 to 8.5			V
V_{OH}	High-level output voltage		V_{ID} = 100 mV, R_L = 10 kΩ	25°C	3.2	3.8		8	8.5		V
				0°C	3	3.8		7.8	8.5		
				70°C	3	3.8		7.8	8.4		
V_{OL}	Low-level output voltage		V_{ID} = –100 mV, I_{OL} = 0	25°C		0	50		0	50	mV
				0°C		0	50		0	50	
				70°C		0	50		0	50	
A_{VD}	Large-signal differential voltage amplification		R_L = 10 kΩ, See Note 6	25°C	5	23		10	36		V/mV
				0°C	4	27		7.5	42		
				70°C	4	20		7.5	32		
CMRR	Common-mode rejection ratio		$V_{IC} = V_{ICR}$min	25°C	65	80		65	85		dB
				0°C	60	84		60	88		
				70°C	60	85		60	88		
k_{SVR}	Supply-voltage rejection ratio ($\Delta V_{DD}/\Delta V_{IO}$)		V_{DD} = 5 V to 10 V V_O = 1.4 V	25°C	65	95		65	95		dB
				0°C	60	94		60	94		
				70°C	60	96		60	96		
$I_{I(SEL)}$	Input current (BIAS SELECT)		$V_{I(SEL)}$ = 0	25°C		–1.4			–1.9		µA
I_{DD}	Supply current		$V_O = V_{DD}/2$, $V_{IC} = V_{DD}/2$, No load	25°C		675	1600		950	2000	µA
				0°C		775	1800		1125	2200	
				70°C		575	1300		750	1700	

† Full range is 0°C to 70°C.

NOTES: 4. The typical values of input bias current and input offset current below 5 pA were determined mathematically.
5. This range also applies to each input individually.
6. At V_{DD} = 5 V, V_O = 0.25 V to 2 V; at V_{DD} = 10 V, V_O = 1 V to 6 V.

www.BDTIC.com/TI

HIGH-BIAS MODE

electrical characteristics at specified free-air temperature (unless otherwise noted)

PARAMETER			TEST CONDITIONS	T_A†	TLC271I, TLC271AI, TLC271BI						UNIT
					V_{DD} = 5 V			V_{DD} = 10 V			
					MIN	TYP	MAX	MIN	TYP	MAX	
V_{IO}	Input offset voltage	TLC271I	V_O = 1.4 V, V_{IC} = 0 V, R_S = 50 Ω, R_L = 10 kΩ	25°C		1.1	10		1.1	10	mV
				Full range			13			13	
		TLC271AI		25°C		0.9	5		0.9	5	
				Full range			7			7	
		TLC271BI		25°C		0.34	2		0.39	2	
				Full range			3.5			3.5	
α_{VIO}	Average temperature coefficient of input offset voltage			25°C to 85°C		1.8			2		µV/°C
I_{IO}	Input offset current (see Note 4)		$V_O = V_{DD}/2$, $V_{IC} = V_{DD}/2$	25°C		0.1	60		0.1	60	pA
				85°C		24	1000		26	1000	
I_{IB}	Input bias current (see Note 4)		$V_O = V_{DD}/2$, $V_{IC} = V_{DD}/2$	25°C		0.6	60		0.7	60	pA
				85°C		200	2000		220	2000	
V_{ICR}	Common-mode input voltage range (see Note 5)			25°C	−0.2 to 4	−0.3 to 4.2		−0.2 to 9	−0.3 to 9.2		V
				Full range	−0.2 to 3.5			−0.2 to 8.5			V
V_{OH}	High-level output voltage		V_{ID} = 100 mV, R_L = 10 kΩ	25°C	3.2	3.8		8	8.5		V
				−40°C	3	3.8		7.8	8.5		
				85°C	3	3.8		7.8	8.5		
V_{OL}	Low-level output voltage		V_{ID} = −100 mV, I_{OL} = 0	25°C		0	50		0	50	mV
				−40°C		0	50		0	50	
				85°C		0	50		0	50	
A_{VD}	Large-signal differential voltage amplification		R_L = 10 kΩ, See Note 6	25°C	5	23		10	36		V/mV
				−40°C	3.5	32		7	46		
				85°C	3.5	19		7	31		
CMRR	Common-mode rejection ratio		$V_{IC} = V_{ICR}$min	25°C	65	80		65	85		dB
				−40°C	60	81		60	87		
				85°C	60	86		60	88		
k_{SVR}	Supply-voltage rejection ratio ($\Delta V_{DD}/\Delta V_{IO}$)		V_{DD} = 5 V to 10 V, V_O = 1.4 V	25°C	65	95		65	95		dB
				−40°C	60	92		60	92		
				85°C	60	96		60	96		
$I_{I(SEL)}$	Input current (BIAS SELECT)		$V_{I(SEL)}$ = 0	25°C		−1.4			−1.9		µA
I_{DD}	Supply current		$V_O = V_{DD}/2$, $V_{IC} = V_{DD}/2$, No load	25°C		675	1600		950	2000	µA
				−40°C		950	2200		1375	2500	
				85°C		525	1200		725	1600	

† Full range is −40°C to 85°C.

NOTES: 4. The typical values of input bias current and input offset current below 5 pA were determined mathematically.
5. This range also applies to each input individually.
6. At V_{DD} = 5 V, V_O = 0.25 V to 2 V; at V_{DD} = 10 V, V_O = 1 V to 6 V.

www.BDTIC.com/TI

HIGH-BIAS MODE

electrical characteristics at specified free-air temperature (unless otherwise noted)

PARAMETER		TEST CONDITIONS	T_A†	TLC271M						UNIT
				V_{DD} = 5 V			V_{DD} = 10 V			
				MIN	TYP	MAX	MIN	TYP	MAX	
V_{IO}	Input offset voltage	V_O = 1.4 V, V_{IC} = 0 V, R_S = 50 Ω, R_L = 10 kΩ	25°C		1.1	10		1.1	10	mV
			Full range			12			12	
α_{VIO}	Average temperature coefficient of input offset voltage		25°C to 125°C		2.1			2.2		µV/°C
I_{IO}	Input offset current (see Note 4)	$V_O = V_{DD}/2$, $V_{IC} = V_{DD}/2$	25°C		0.1	60		0.1	60	pA
			125°C		1.4	15		1.8	15	nA
I_{IB}	Input bias current (see Note 4)	$V_O = V_{DD}/2$, $V_{IC} = V_{DD}/2$	25°C		0.6	60		0.7	60	pA
			125°C		9	35		10	35	nA
V_{ICR}	Common-mode input voltage range (see Note 5)		25°C	0 to 4	–0.3 to 4.2		0 to 9	–0.3 to 9.2		V
			Full range	0 to 3.5			0 to 8.5			V
V_{OH}	High-level output voltage	V_{ID} = 100 mV, R_L = 10 kΩ	25°C	3.2	3.8		8	8.5		V
			–55°C	3	3.8		7.8	8.5		
			125°C	3	3.8		7.8	8.4		
V_{OL}	Low-level output voltage	V_{ID} = –100 mV, I_{OL} = 0	25°C		0	50		0	50	mV
			–55°C		0	50		0	50	
			125°C		0	50		0	50	
A_{VD}	Large-signal differential voltage amplification	R_L = 10 kΩ, See Note 6	25°C	5	23		10	36		V/mV
			–55°C	3.5	35		7	50		
			125°C	3.5	16		7	27		
CMRR	Common-mode rejection ratio	$V_{IC} = V_{ICR}$min	25°C	65	80		65	85		dB
			–55°C	60	81		60	87		
			125°C	60	84		60	86		
k_{SVR}	Supply-voltage rejection ratio ($\Delta V_{DD}/\Delta V_{IO}$)	V_{DD} = 5 V to 10 V V_O = 1.4 V	25°C	65	95		65	95		dB
			–55°C	60	90		60	90		
			125°C	60	97		60	97		
$I_{I(SEL)}$	Input current (BIAS SELECT)	$V_{I(SEL)}$ = 0	25°C		–1.4			–1.9		µA
I_{DD}	Supply current	$V_O = V_{DD}/2$, $V_{IC} = V_{DD}/2$, No load	25°C		675	1600		950	2000	µA
			–55°C		1000	2500		1475	3000	
			125°C		475	1100		625	1400	

† Full range is –55°C to 125°C.

NOTES: 4. The typical values of input bias current and input offset current below 5 pA were determined mathematically.
5. This range also applies to each input individually.
6. At V_{DD} = 5 V, V_O = 0.25 V to 2 V; at V_{DD} = 10 V, V_O = 1 V to 6 V.

www.BDTIC.com/TI

HIGH-BIAS MODE

operating characteristics at specified free-air temperature, V_{DD} = 5 V

PARAMETER		TEST CONDITIONS		T_A	TLC271C, TLC271AC, TLC271BC MIN	TYP	MAX	UNIT
SR	Slew rate at unity gain	R_L = 10 kΩ, C_L = 20 pF, See Figure 98	$V_{I(PP)}$ = 1 V	25°C		3.6		V/µs
				0°C		4		
				70°C		3		
			$V_{I(PP)}$ = 2.5 V	25°C		2.9		
				0°C		3.1		
				70°C		2.5		
V_n	Equivalent input noise voltage	f = 1 kHz, See Figure 99	R_S = 20 Ω,	25°C		25		nV/√Hz
B_{OM}	Maximum output-swing bandwidth	$V_O = V_{OH}$, R_L = 10 kΩ,	C_L = 20 pF, See Figure 98	25°C		320		kHz
				0°C		340		
				70°C		260		
B_1	Unity-gain bandwidth	V_I = 10 mV, See Figure 100	C_L = 20 pF,	25°C		1.7		MHz
				0°C		2		
				70°C		1.3		
ϕ_m	Phase margin	V_I = 10 mV, C_L = 20 pF,	f = B_1, See Figure 100	25°C		46°		
				0°C		47°		
				70°C		44°		

operating characteristics at specified free-air temperature, V_{DD} = 10 V

PARAMETER		TEST CONDITIONS		T_A	TLC271C, TLC271AC, TLC271BC MIN	TYP	MAX	UNIT
SR	Slew rate at unity gain	R_L = 10 kΩ, C_L = 20 pF, See Figure 98	$V_{I(PP)}$ = 1 V	25°C		5.3		V/µs
				0°C		5.9		
				70°C		4.3		
			$V_{I(PP)}$ = 5.5 V	25°C		4.6		
				0°C		5.1		
				70°C		3.8		
V_n	Equivalent input noise voltage	f = 1 kHz, See Figure 99	R_S = 20 Ω,	25°C		25		nV/√Hz
B_{OM}	Maximum output-swing bandwidth	$V_O = V_{OH}$, R_L = 10 kΩ,	C_L = 20 pF, See Figure 98	25°C		200		kHz
				0°C		220		
				70°C		140		
B_1	Unity-gain bandwidth	V_I = 10 mV, See Figure 100	C_L = 20 pF,	25°C		2.2		MHz
				0°C		2.5		
				70°C		1.8		
ϕ_m	Phase margin	f = B_1, C_L = 20 pF,	V_I = 10 mV, See Figure 100	25°C		49°		
				0°C		50°		
				70°C		46°		

www.BDTIC.com/TI

HIGH-BIAS MODE

operating characteristics at specified free-air temperature, V_{DD} = 5 V

PARAMETER		TEST CONDITIONS		T_A	TLC271I, TLC271AI, TLC271BI MIN	TYP	MAX	UNIT
SR	Slew rate at unity gain	R_L = 10 kΩ, C_L = 20 pF, See Figure 98	$V_{I(PP)}$ = 1 V	25°C		3.6		V/µs
				–40°C		4.5		
				85°C		2.8		
			$V_{I(PP)}$ = 2.5 V	25°C		2.9		
				–40°C		3.5		
				85°C		2.3		
V_n	Equivalent input noise voltage	f = 1 kHz, See Figure 99	R_S = 20 Ω,	25°C		25		nV/√Hz
B_{OM}	Maximum output-swing bandwidth	$V_O = V_{OH}$, R_L = 10 kΩ,	C_L = 20 pF, See Figure 98	25°C		320		kHz
				–40°C		380		
				85°C		250		
B_1	Unity-gain bandwidth	V_I = 10 mV, See Figure 100	C_L = 20 pF,	25°C		1.7		MHz
				–40°C		2.6		
				85°C		1.2		
ϕ_m	Phase margin	V_I = 10 mV, C_L = 20 pF,	f = B_1, See Figure 100	25°C		46°		
				–40°C		49°		
				85°C		43°		

operating characteristics at specified free-air temperature, V_{DD} = 10 V

PARAMETER		TEST CONDITIONS		T_A	TLC271I, TLC271AI, TLC271BI MIN	TYP	MAX	UNIT
SR	Slew rate at unity gain	R_L = 10 kΩ, C_L = 20 pF, See Figure 98	$V_{I(PP)}$ = 1 V	25°C		5.3		V/µs
				–40°C		6.8		
				85°C		4		
			$V_{I(PP)}$ = 5.5 V	25°C		4.6		
				–40°C		5.8		
				85°C		3.5		
V_n	Equivalent input noise voltage	f = 1 kHz, See Figure 99	R_S = 20 Ω,	25°C		25		nV/√Hz
B_{OM}	Maximum output-swing bandwidth	$V_O = V_{OH}$, R_L = 10 kΩ,	C_L = 20 pF, See Figure 98	25°C		200		kHz
				–40°C		260		
				85°C		130		
B_1	Unity-gain bandwidth	V_I = 10 mV, See Figure 100	C_L = 20 pF,	25°C		2.2		MHz
				–40°C		3.1		
				85°C		1.7		
ϕ_m	Phase margin	V_I = 10 mV, C_L = 20 pF,	f= B_1, See Figure 100	25°C		49°		
				–40°C		52°		
				85°C		46°		

www.BDTIC.com/TI

HIGH-BIAS MODE

operating characteristics at specified free-air temperature, V_{DD} = 5 V

PARAMETER		TEST CONDITIONS		T_A	TLC271M MIN	TLC271M TYP	TLC271M MAX	UNIT
SR	Slew rate at unity gain	R_L = 10 kΩ, C_L = 20 pF, See Figure 98	$V_{I(PP)}$ = 1 V	25°C		3.6		V/µs
				–55°C		4.7		
				125°C		2.3		
			$V_{I(PP)}$ = 2.5 V	25°C		2.9		
				–55°C		3.7		
				125°C		2		
V_n	Equivalent input noise voltage	f = 1 kHz, See Figure 99	R_S = 20 Ω,	25°C		25		nV/√Hz
B_{OM}	Maximum output-swing bandwidth	$V_O = V_{OH}$, R_L = 10 kΩ,	C_L = 20 pF, See Figure 98	25°C		320		kHz
				–55°C		400		
				125°C		230		
B_1	Unity-gain bandwidth	V_I = 10 mV, See Figure 100	C_L = 20 pF,	25°C		1.7		MHz
				–55°C		2.9		
				125°C		1.1		
ϕ_m	Phase margin	V_I = 10 mV, C_L = 20 pF,	f = B_1, See Figure 100	25°C		46°		
				–55°C		49°		
				125°C		41°		

operating characteristics at specified free-air temperature, V_{DD} = 10 V

PARAMETER		TEST CONDITIONS		T_A	TLC271M MIN	TLC271M TYP	TLC271M MAX	UNIT
SR	Slew rate at unity gain	R_L = 10 kΩ, C_L = 20 pF, See Figure 98	$V_{I(PP)}$ = 1 V	25°C		5.3		V/µs
				–55°C		7.1		
				125°C		3.1		
			$V_{I(PP)}$ = 5.5 V	25°C		4.6		
				–55°C		6.1		
				125°C		2.7		
V_n	Equivalent input noise voltage	f = 1 kHz, See Figure 99	R_S = 20 Ω,	25°C		25		nV/√Hz
B_{OM}	Maximum output-swing bandwidth	$V_O = V_{OH}$, R_L = 10 kΩ,	C_L = 20 pF, See Figure 98	25°C		200		kHz
				–55°C		280		
				125°C		110		
B_1	Unity-gain bandwidth	V_I = 10 mV, See Figure 100	C_L = 20 pF,	25°C		2.2		MHz
				–55°C		3.4		
				125°C		1.6		
ϕ_m	Phase margin	f = B_1, C_L = 20 pF,	V_I = 10 mV, See Figure 100	25°C		49°		
				–55°C		52°		
				125°C		44°		

www.BDTIC.com/TI

TYPICAL CHARACTERISTICS (HIGH-BIAS MODE)

Table of Graphs

			FIGURE
V_{IO}	Input offset voltage	Distribution	2, 3
α_{VIO}	Temperature coefficient	Distribution	4, 5
V_{OH}	High-level output voltage	vs High-level output current vs Supply voltage vs Free-air temperature	6, 7 8 9
V_{OL}	Low-level output voltage	vs Common-mode input voltage vs Differential input voltage vs Free-air temperature vs Low-level output current	10, 11 12 13 14, 15
A_{VD}	Large-signal differential voltage amplification	vs Supply voltage vs Free-air temperature vs Frequency	16 17 28, 29
I_{IB}	Input bias current	vs Free-air temperature	18
I_{IO}	Input offset current	vs Free-air temperature	18
V_{IC}	Common-mode input voltage	vs Supply voltage	19
I_{DD}	Supply current	vs Supply voltage vs Free-air temperature	20 21
SR	Slew rate	vs Supply voltage vs Free-air temperature	22 23
	Bias-select current	vs Supply voltage	24
$V_{O(PP)}$	Maximum peak-to-peak output voltage	vs Frequency	25
B_1	Unity-gain bandwidth	vs Free-air temperature vs Supply voltage	26 27
A_{VD}	Large-signal differential voltage amplification	vs Frequency	28, 29
ϕ_m	Phase margin	vs Supply voltage vs Free-air temperature vs Capacitive load	30 31 32
V_n	Equivalent input noise voltage	vs Frequency	33
	Phase shift	vs Frequency	28, 29

www.BDTIC.com/TI

TYPICAL CHARACTERISTICS (HIGH-BIAS MODE)†

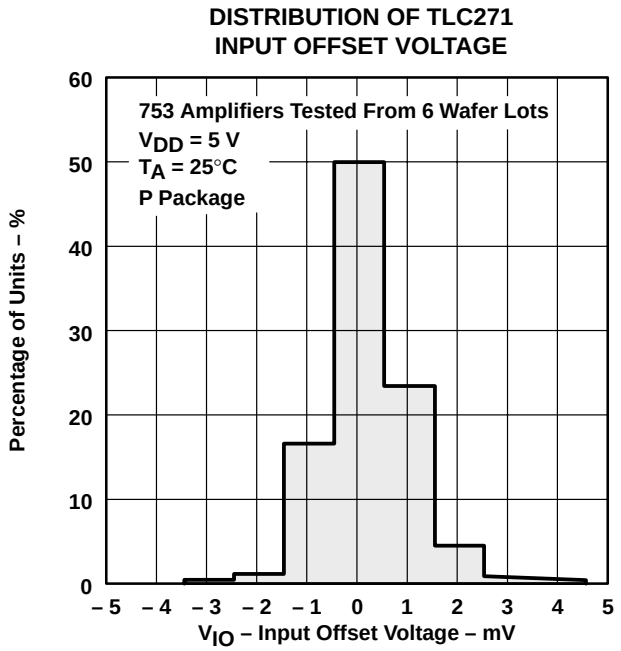

Figure 2

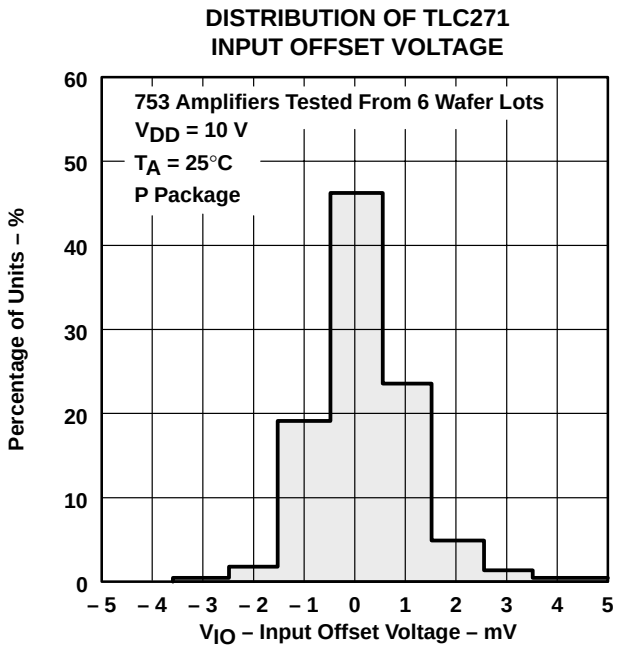

Figure 3

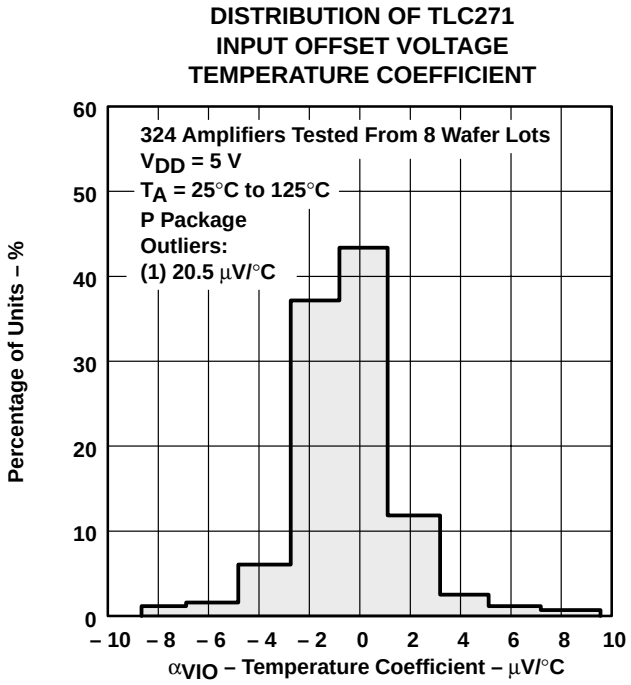

Figure 4

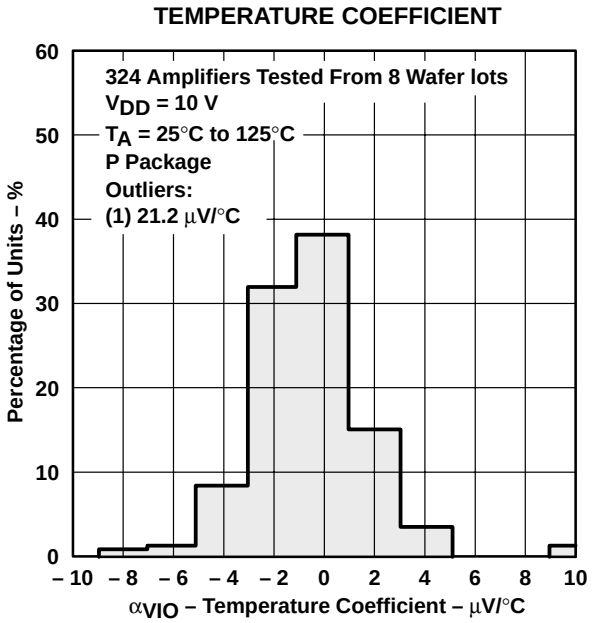

Figure 5

† Data at high and low temperatures are applicable only within the rated operating free-air temperature ranges of the various devices.

www.BDTIC.com/TI

TYPICAL CHARACTERISTICS (HIGH-BIAS MODE)†

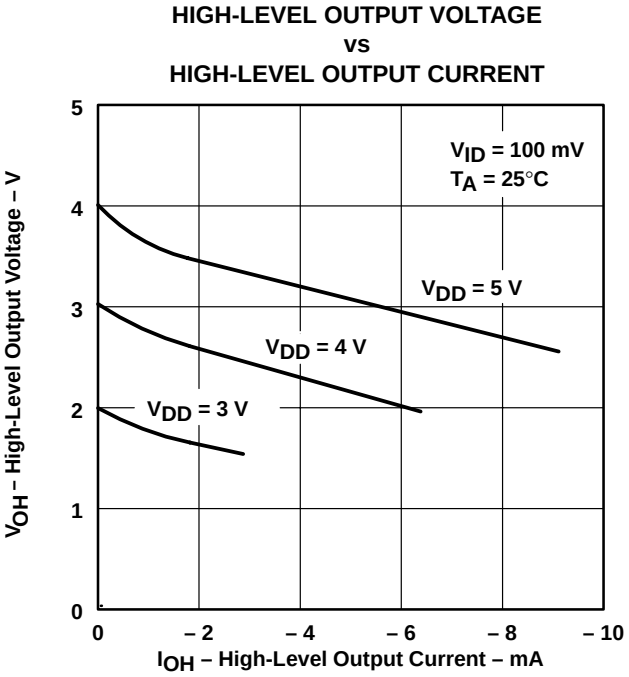

Figure 6

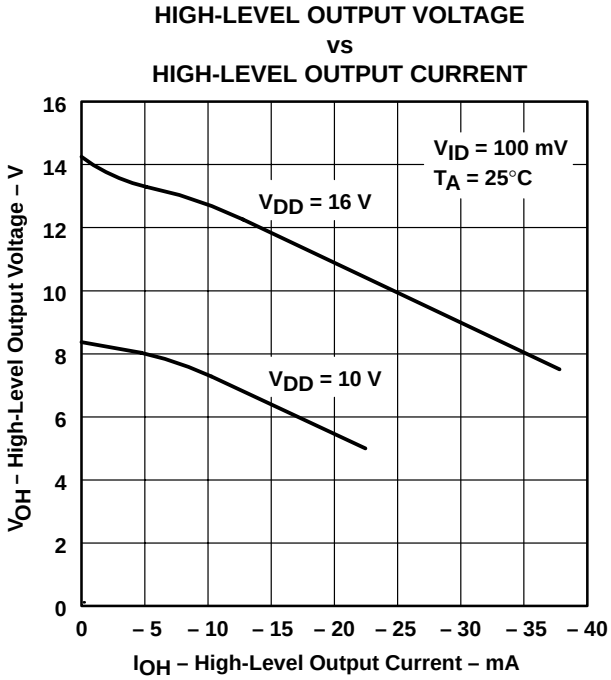

Figure 7

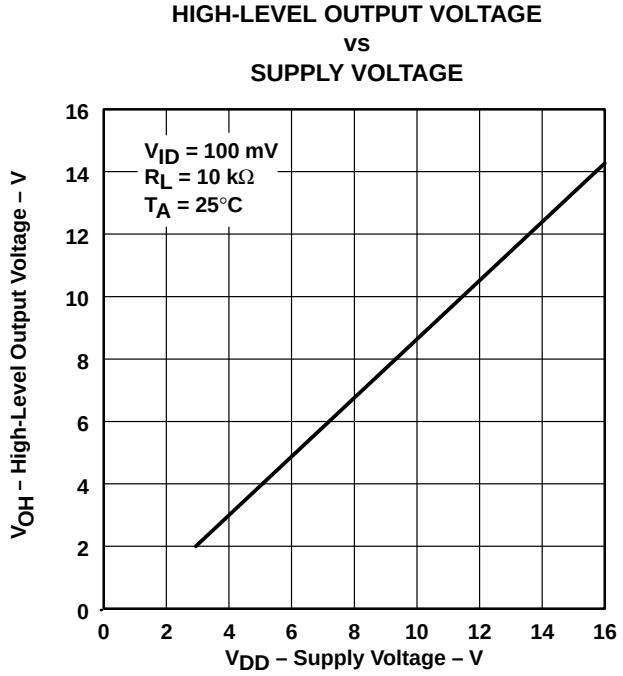

Figure 8

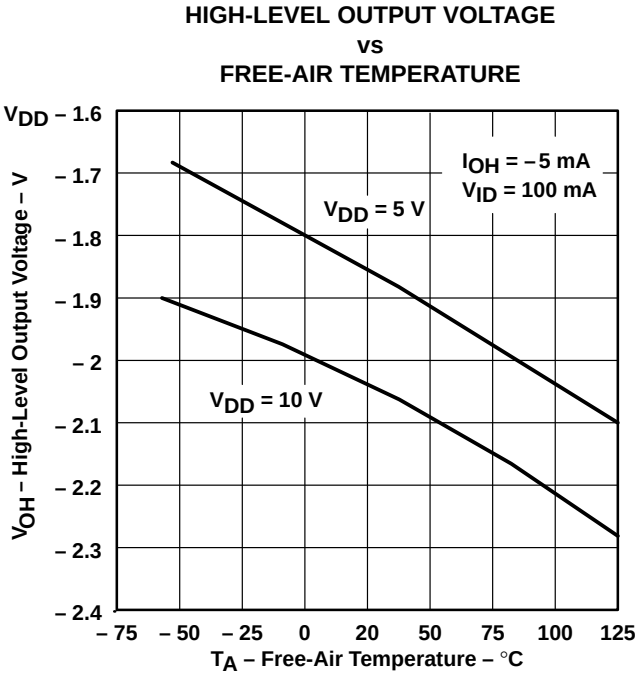

Figure 9

† Data at high and low temperatures are applicable only within the rated operating free-air temperature ranges of the various devices.

www.BDTIC.com/TI

TYPICAL CHARACTERISTICS (HIGH-BIAS MODE)†

LOW-LEVEL OUTPUT VOLTAGE vs COMMON-MODE INPUT VOLTAGE

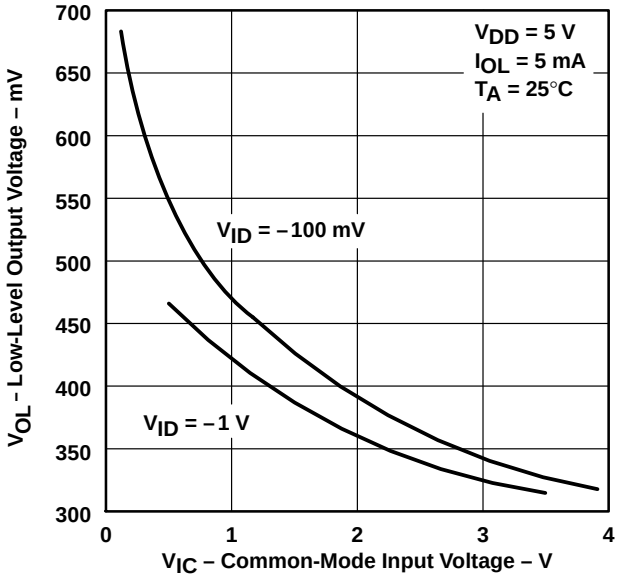

Figure 10

LOW-LEVEL OUTPUT VOLTAGE vs COMMON-MODE INPUT VOLTAGE

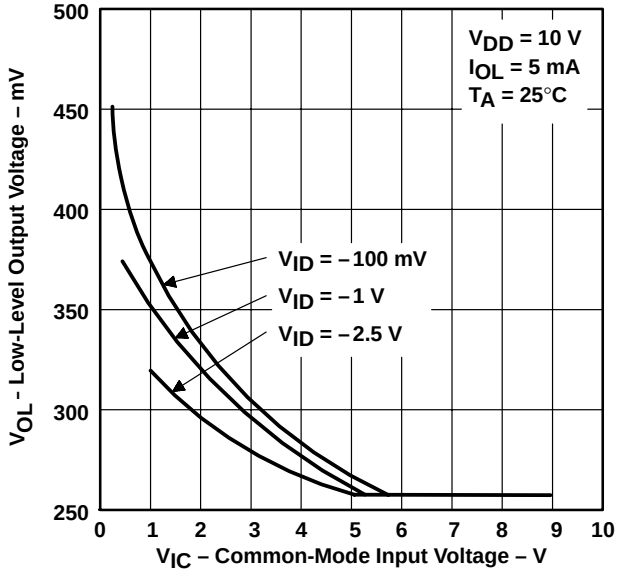

Figure 11

LOW-LEVEL OUTPUT VOLTAGE vs DIFFERENTIAL INPUT VOLTAGE

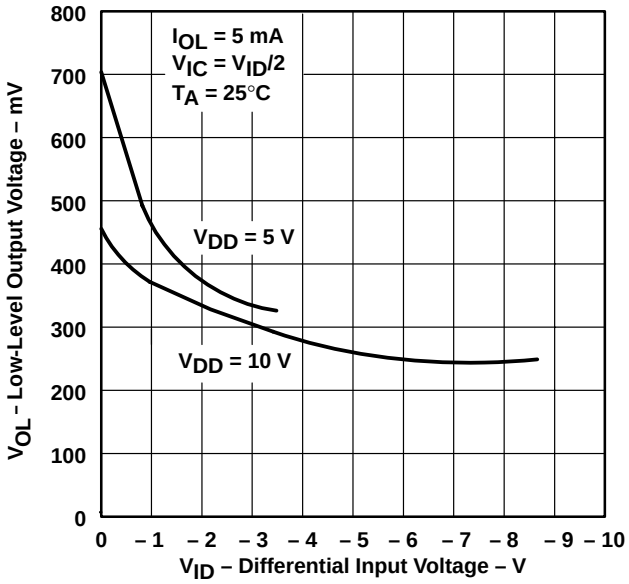

Figure 12

LOW-LEVEL OUTPUT VOLTAGE vs FREE-AIR TEMPERATURE

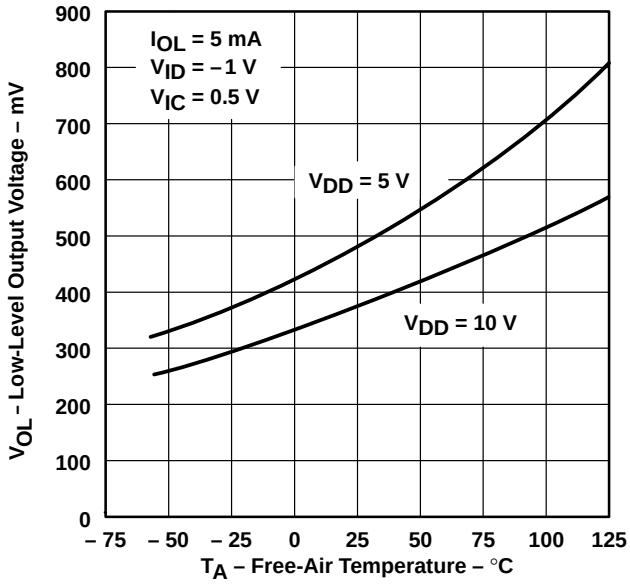

Figure 13

† Data at high and low temperatures are applicable only within the rated operating free-air temperature ranges of the various devices.

www.BDTIC.com/TI

TYPICAL CHARACTERISTICS (HIGH-BIAS MODE)†

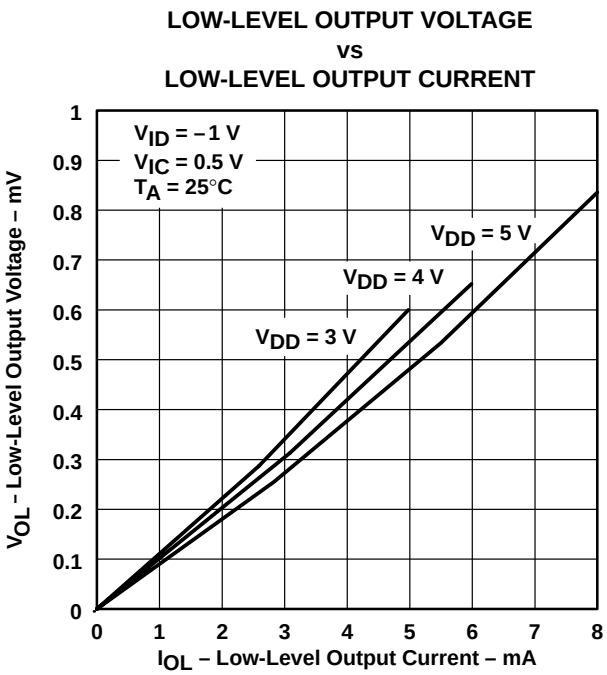

Figure 14

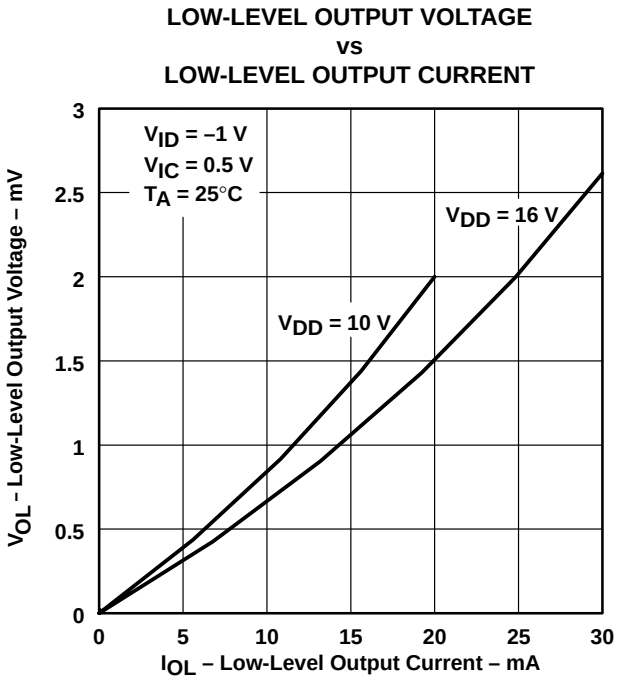

Figure 15

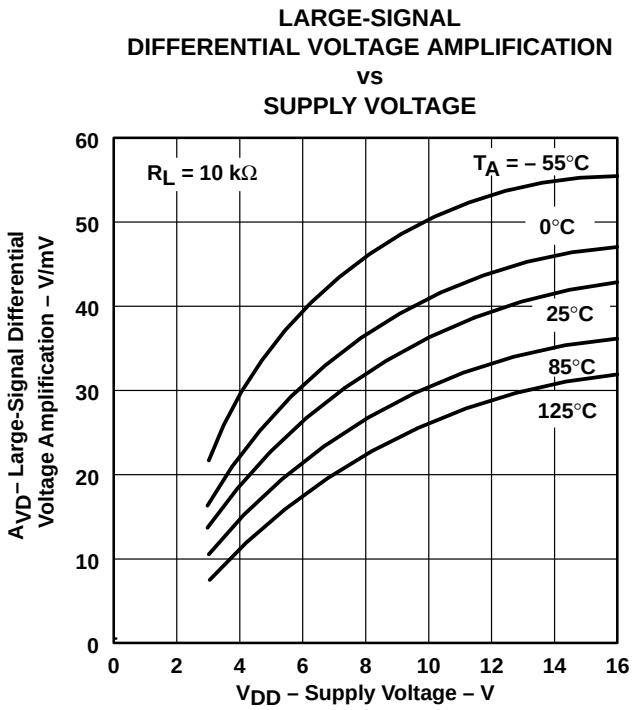

Figure 16

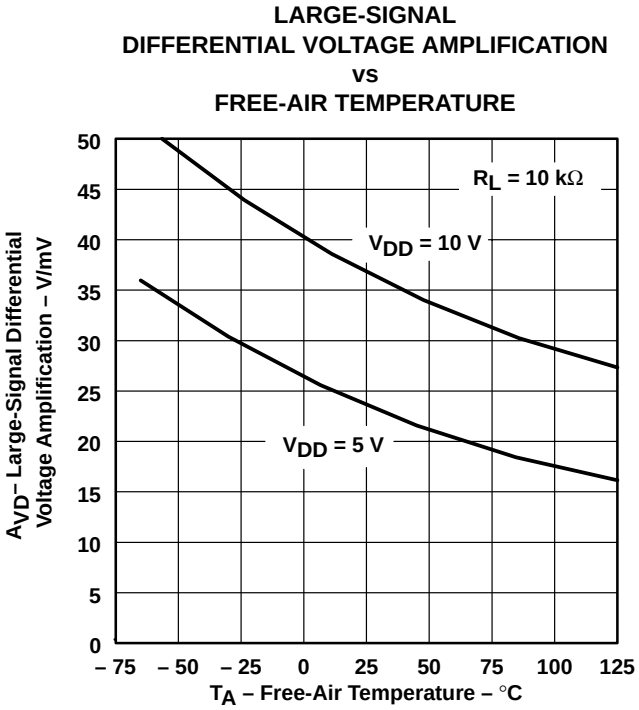

Figure 17

† Data at high and low temperatures are applicable only within the rated operating free-air temperature ranges of the various devices.

www.BDTIC.com/TI

TYPICAL CHARACTERISTICS (HIGH-BIAS MODE)†

INPUT BIAS CURRENT AND INPUT OFFSET CURRENT vs FREE-AIR TEMPERATURE

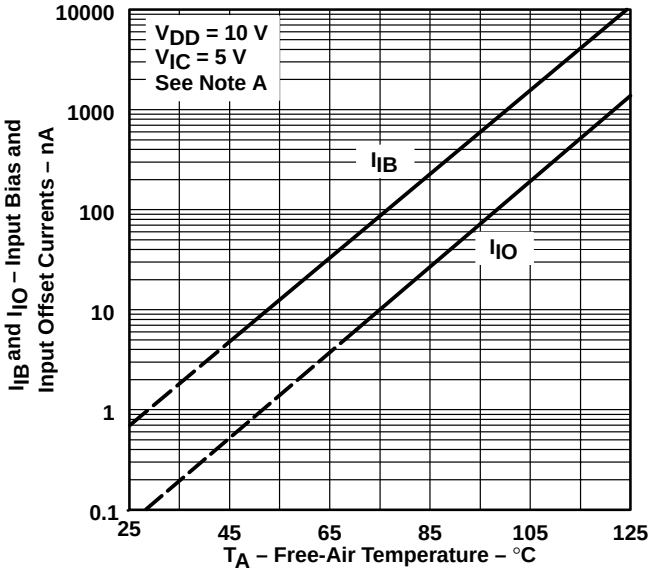

NOTE A: The typical values of input bias current and input offset current below 5 pA were determined mathematically.

Figure 18

COMMON-MODE INPUT VOLTAGE (POSITIVE LIMIT) vs SUPPLY VOLTAGE

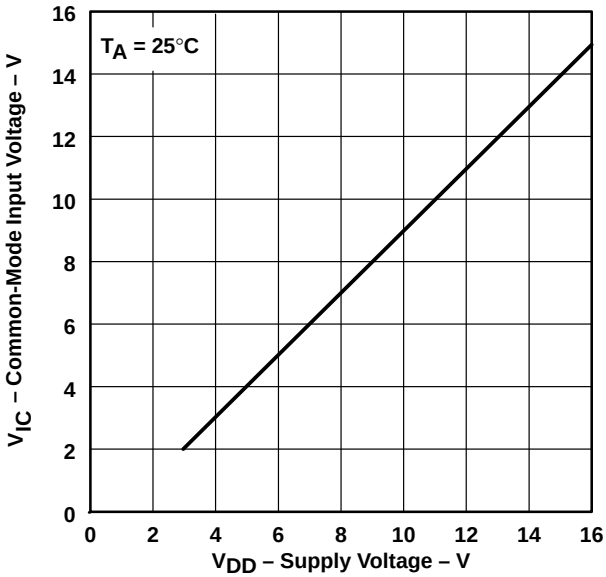

Figure 19

SUPPLY CURRENT vs SUPPLY VOLTAGE

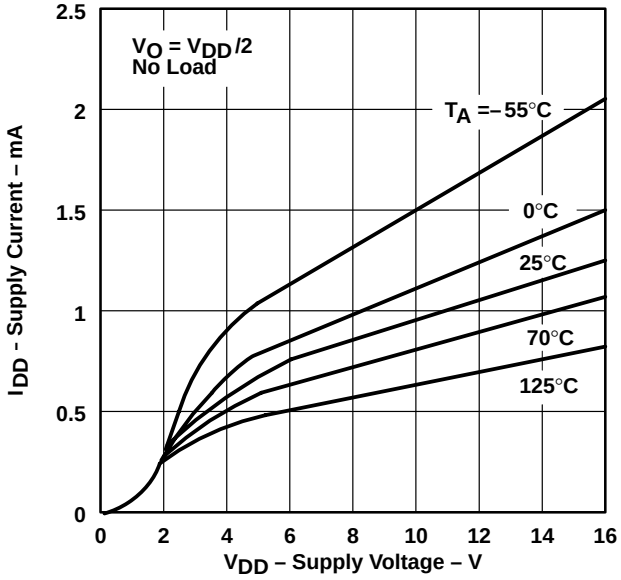

Figure 20

SUPPLY CURRENT vs FREE-AIR TEMPERATURE

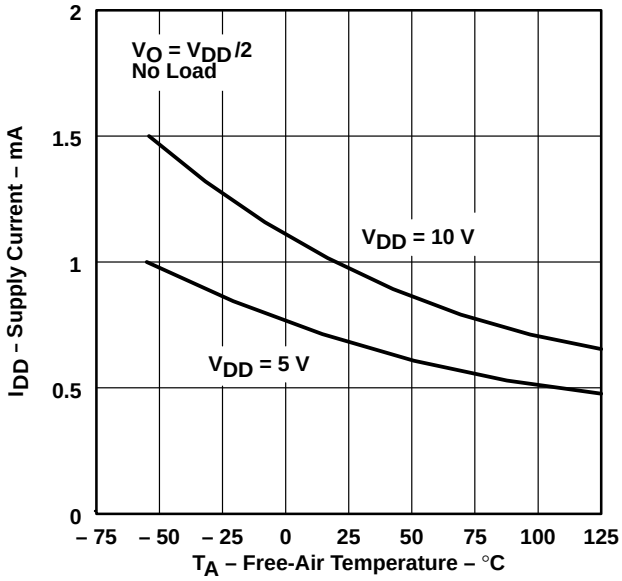

Figure 21

† Data at high and low temperatures are applicable only within the rated operating free-air temperature ranges of the various devices.

www.BDTIC.com/TI

TYPICAL CHARACTERISTICS (HIGH-BIAS MODE)†

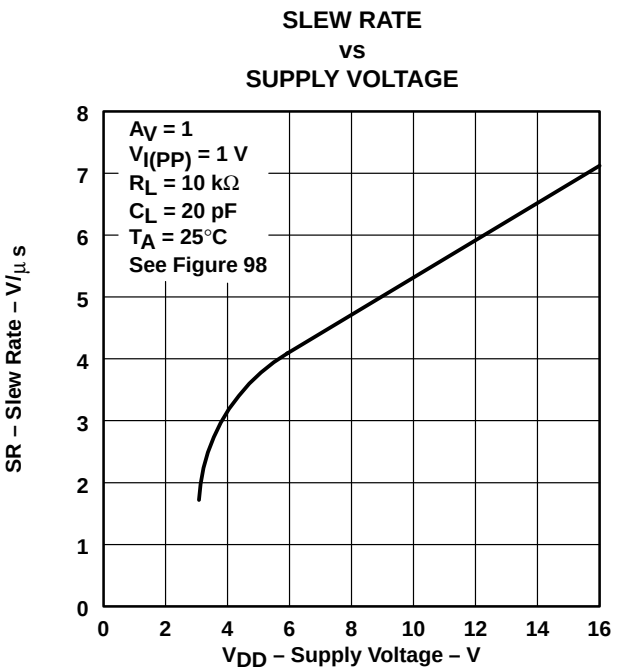

Figure 22

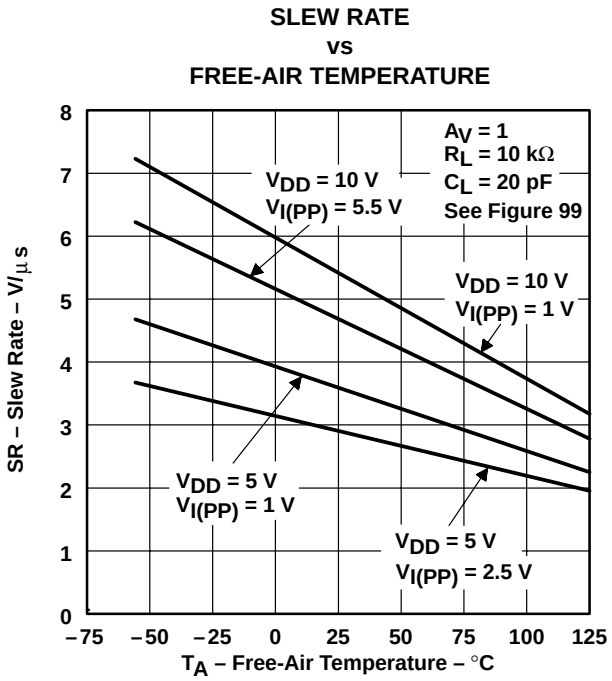

Figure 23

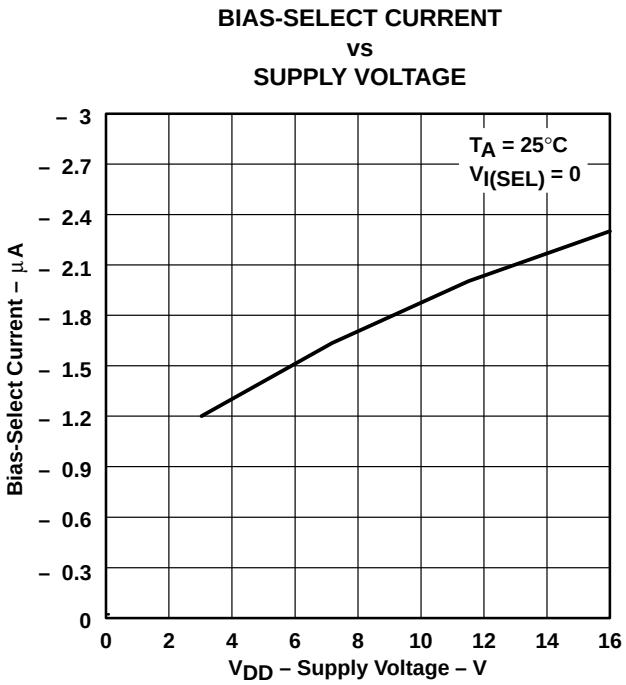

Figure 24

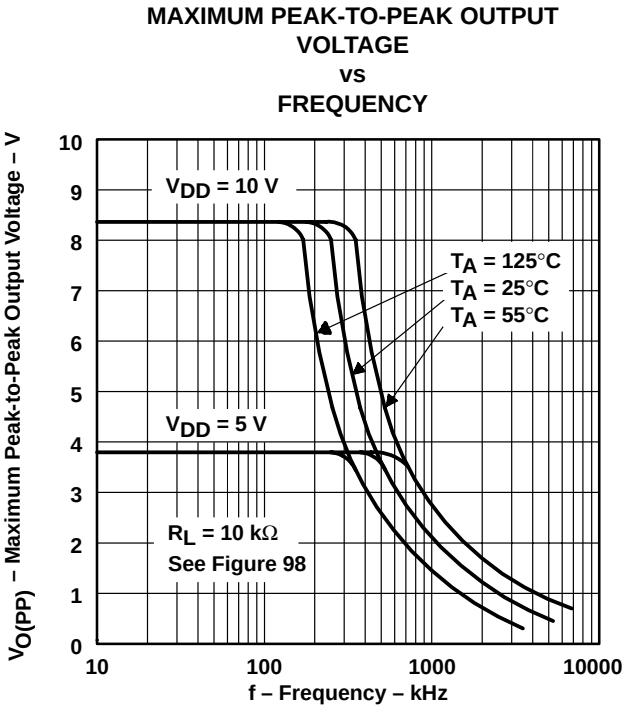

Figure 25

† Data at high and low temperatures are applicable only within the rated operating free-air temperature ranges of the various devices.

www.BDTIC.com/TI

TYPICAL CHARACTERISTICS (HIGH-BIAS MODE)†

UNITY-GAIN BANDWIDTH vs FREE-AIR TEMPERATURE

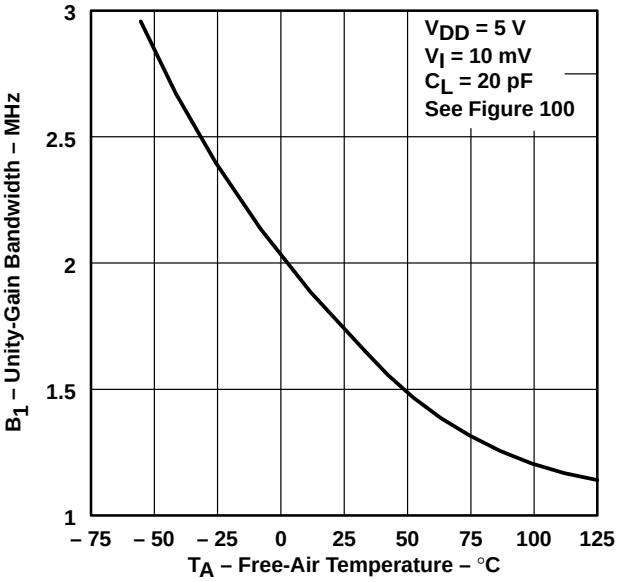

Figure 26

UNITY-GAIN BANDWIDTH vs SUPPLY VOLTAGE

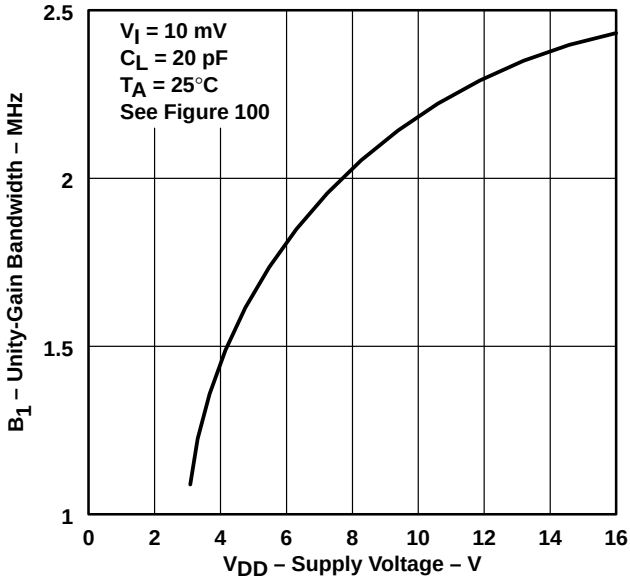

Figure 27

LARGE-SIGNAL DIFFERENTIAL VOLTAGE AMPLIFICATION AND PHASE SHIFT vs FREQUENCY

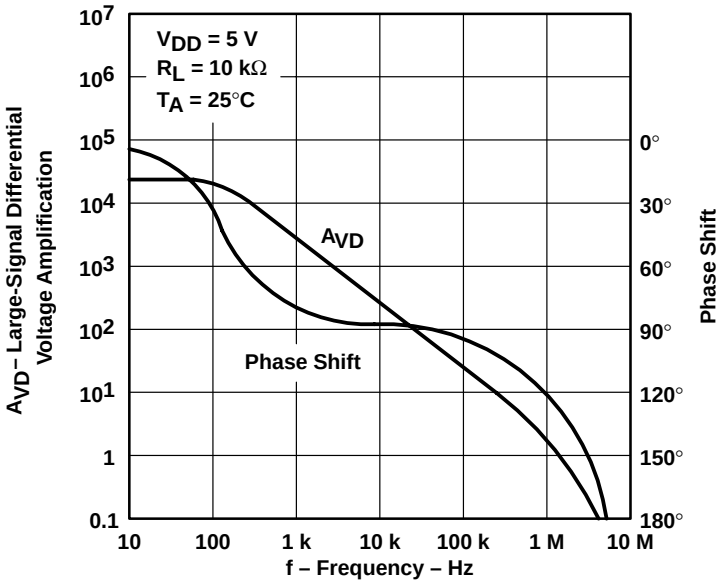

Figure 28

† Data at high and low temperatures are applicable only within the rated operating free-air temperature ranges of the various devices.

www.BDTIC.com/TI

TYPICAL CHARACTERISTICS (HIGH-BIAS MODE)†

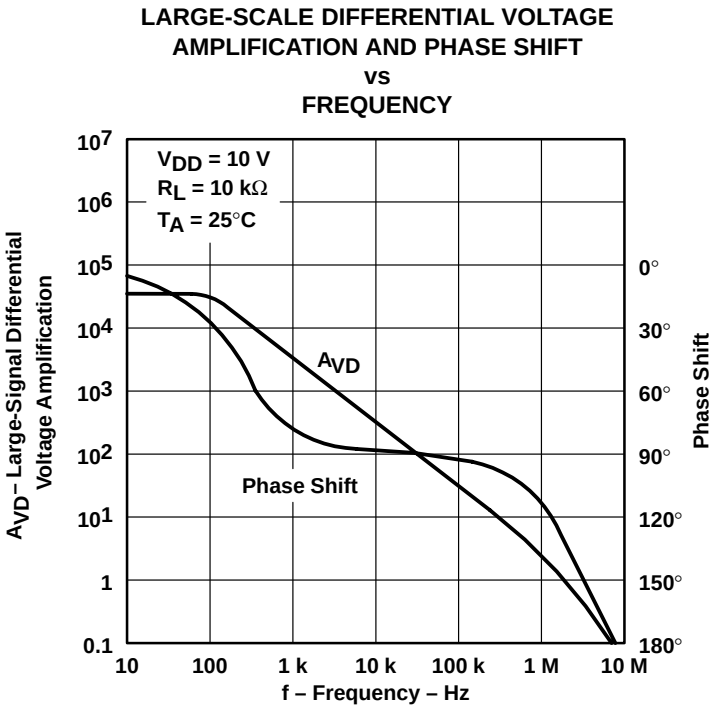

Figure 29

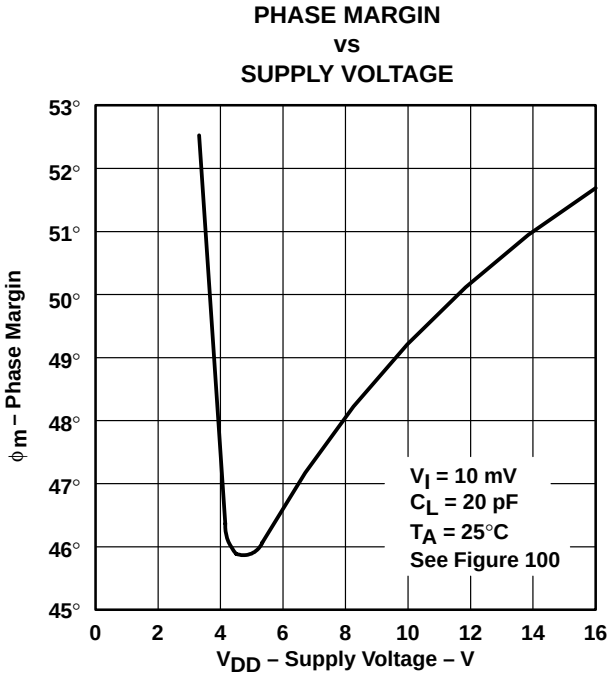

Figure 30

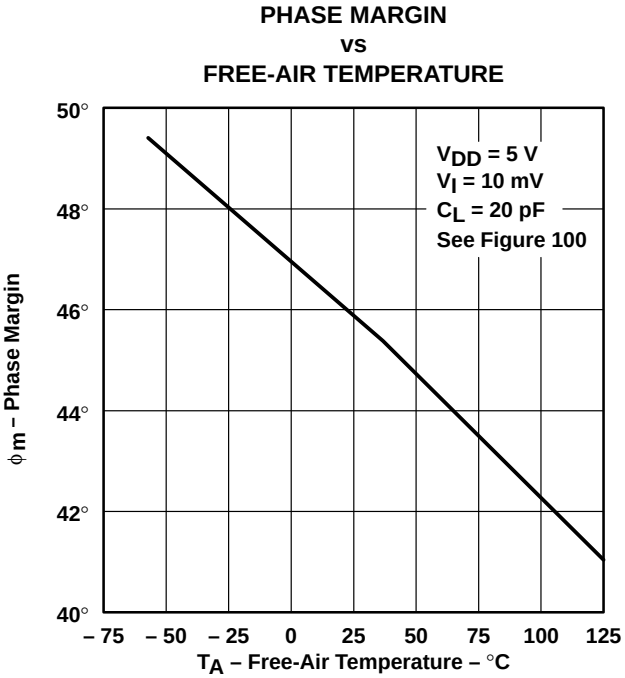

Figure 31

† Data at high and low temperatures are applicable only within the rated operating free-air temperature ranges of the various devices.

www.BDTIC.com/TI

TYPICAL CHARACTERISTICS (HIGH-BIAS MODE)†

PHASE MARGIN vs CAPACITIVE LOAD

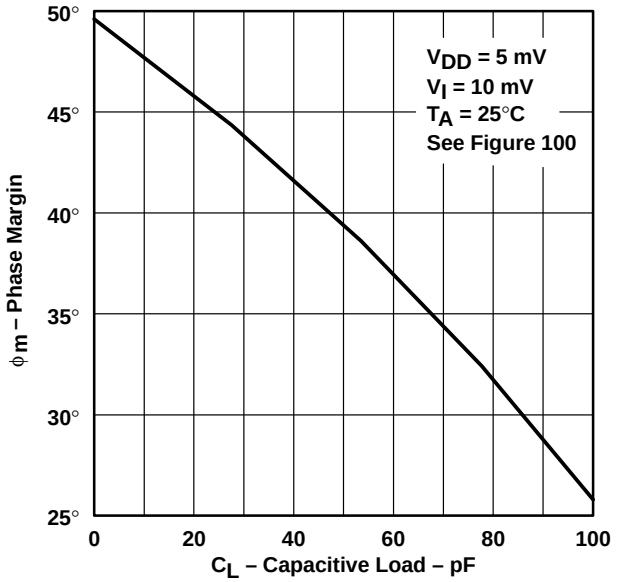

Figure 32

EQUIVALENT NOISE VOLTAGE vs FREQUENCY

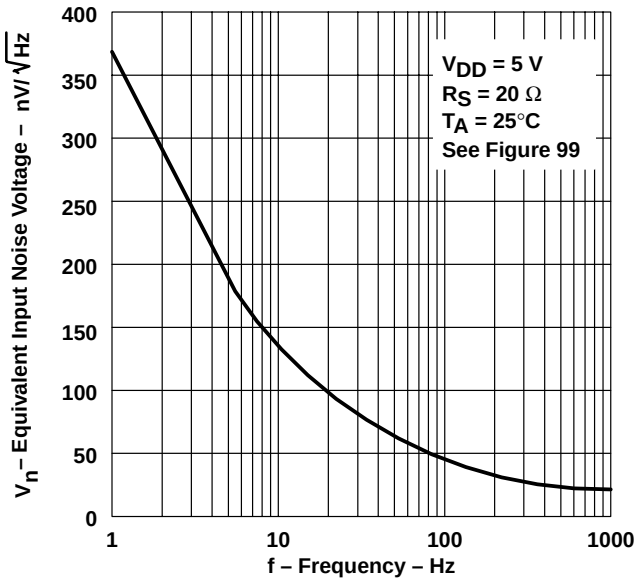

Figure 33

† Data at high and low temperatures are applicable only within the rated operating free-air temperature ranges of the various devices.

www.BDTIC.com/TI

MEDIUM-BIAS MODE

electrical characteristics at specified free-air temperature (unless otherwise noted)

PARAMETER			TEST CONDITIONS	T_A†	TLC271C, TLC271AC, TLC271BC						UNIT
					V_{DD} = 5 V			V_{DD} = 10 V			
					MIN	TYP	MAX	MIN	TYP	MAX	
V_{IO}	Input offset voltage	TLC271C	V_O = 1.4 V, V_{IC} = 0, R_S = 50 Ω, R_I = 100 kΩ	25°C		1.1	10		1.1	10	mV
				Full range			12			12	
		TLC271AC		25°C		0.9	5		0.9	5	
				Full range			6.5			6.5	
		TLC271BC		25°C		0.25	2		0.26	2	
				Full range			3			3	
α_{VIO}	Average temperature coefficient of input offset voltage			25°C to 70°C		1.7			2.1		µV/°C
I_{IO}	Input offset current (see Note 4)		$V_O = V_{DD}/2$, $V_{IC} = V_{DD}/2$	25°C		0.1	60		0.1	60	pA
				70°C		7	300		7	300	
I_{IB}	Input bias current (see Note 4)		$V_O = V_{DD}/2$, $V_{IC} = V_{DD}/2$	25°C		0.6	60		0.7	60	pA
				70°C		40	600		50	600	
V_{ICR}	Common-mode input voltage range (see Note 5)			25°C	–0.2 to 4	–0.3 to 4.2		–0.2 to 9	–0.3 to 9.2		V
				Full range	–0.2 to 3.5			–0.2 to 8.5			V
V_{OH}	High-level output voltage		V_{ID} = 100 mV, R_L = 100 kΩ	25°C	3.2	3.9		8	8.7		V
				0°C	3	3.9		7.8	8.7		
				70°C	3	4		7.8	8.7		
V_{OL}	Low-level output voltage		V_{ID} = –100 mV, I_{OL} = 0	25°C		0	50		0	50	mV
				0°C		0	50		0	50	
				70°C		0	50		0	50	
A_{VD}	Large-signal differential voltage amplification		R_L = 100 kΩ, See Note 6	25°C	25	170		25	275		V/mV
				0°C	15	200		15	320		
				70°C	15	140		15	230		
CMRR	Common-mode rejection ratio		$V_{IC} = V_{ICR}$min	25°C	65	91		65	94		dB
				0°C	60	91		60	94		
				70°C	60	92		60	94		
k_{SVR}	Supply-voltage rejection ratio ($\Delta V_{DD}/\Delta V_{IO}$)		V_{DD} = 5 V to 10 V, V_O = 1.4 V	25°C	70	93		70	93		dB
				0°C	60	92		60	92		
				70°C	60	94		60	94		
$I_{I(SEL)}$	Input current (BIAS SELECT)		$V_{I(SEL)} = V_{DD}/2$	25°C		–130			–160		nA
I_{DD}	Supply current		$V_O = V_{DD}/2$, $V_{IC} = V_{DD}/2$, No load	25°C		105	280		143	300	µA
				0°C		125	320		173	400	
				70°C		85	220		110	280	

† Full range is 0°C to 70°C.

NOTES: 4. The typical values of input bias current and input offset current below 5 pA were determined mathematically.
5. This range also applies to each input individually.
6. At V_{DD} = 5 V, V_O = 0.25 V to 2 V; at V_{DD} = 10 V, V_O = 1 V to 6 V.

TEXAS INSTRUMENTS
POST OFFICE BOX 655303 • DALLAS, TEXAS 75265
www.BDTIC.com/TI

MEDIUM-BIAS MODE

electrical characteristics at specified free-air temperature (unless otherwise noted)

PARAMETER			TEST CONDITIONS	T_A†	TLC271I, TLC271AI, TLC271BI						UNIT
					V_{DD} = 5 V			V_{DD} = 10 V			
					MIN	TYP	MAX	MIN	TYP	MAX	
V_{IO}	Input offset voltage	TLC271I	V_O = 1.4 V, V_{IC} = 0 V, R_S = 50 Ω, R_L = 100 kΩ	25°C		1.1	10		1.1	10	mV
				Full range			13			13	
		TLC271AI		25°C		0.9	5		0.9	5	
				Full range			7			7	
		TLC271BI		25°C		0.25	2		0.26	2	
				Full range			3.5			3.5	
α_{VIO}	Average temperature coefficient of input offset voltage			25°C to 85°C		1.7			2.1		µV/°C
I_{IO}	Input offset current (see Note 4)		$V_O = V_{DD}/2$, $V_{IC} = V_{DD}/2$	25°C		0.1	60		0.1	60	pA
				85°C		24	1000		26	1000	
I_{IB}	Input bias current (see Note 4)		$V_O = V_{DD}/2$, $V_{IC} = V_{DD}/2$	25°C		0.6	60		0.7	60	pA
				85°C		200	2000		220	2000	
V_{ICR}	Common-mode input voltage range (see Note 5)			25°C	−0.2 to 4	−0.3 to 4.2		−0.2 to 9	−0.3 to 9.2		V
				Full range	−0.2 to 3.5			−0.2 to 8.5			V
V_{OH}	High-level output voltage		V_{ID} = 100 mV, R_L = 100 kΩ	25°C	3.2	3.9		8	8.7		V
				−40°C	3	3.9		7.8	8.7		
				85°C	3	4		7.8	8.7		
V_{OL}	Low-level output voltage		V_{ID} = −100 mV, I_{OL} = 0	25°C		0	50		0	50	mV
				−40°C		0	50		0	50	
				85°C		0	50		0	50	
A_{VD}	Large-signal differential voltage amplification		R_L = 100 kΩ, See Note 6	25°C	25	170		25	275		V/mV
				−40°C	15	270		15	390		
				85°C	15	130		15	220		
CMRR	Common-mode rejection ratio		$V_{IC} = V_{ICR}$min	25°C	65	91		65	94		dB
				−40°C	60	90		60	93		
				85°C	60	90		60	94		
k_{SVR}	Supply-voltage rejection ratio ($\Delta V_{DD}/\Delta V_{IO}$)		V_{DD} = 5 V to 10 V, V_O = 1.4 V	25°C	70	93		70	93		dB
				−40°C	60	91		60	91		
				85°C	60	94		60	94		
$I_{I(SEL)}$	Input current (BIAS SELECT)		$V_{I(SEL)} = V_{DD}/2$	25°C		−130			−160		nA
I_{DD}	Supply current		$V_O = V_{DD}/2$, $V_{IC} = V_{DD}/2$, No load	25°C		105	280		143	300	µA
				−40°C		158	400		225	450	
				85°C		80	200		103	260	

† Full range is −40°C to 85°C.

NOTES: 4. The typical values of input bias current and input offset current below 5 pA were determined mathematically.
5. This range also applies to each input individually.
6. At V_{DD} = 5 V, V_O = 0.25 V to 2 V; at V_{DD} = 10 V, V_O = 1 V to 6 V.

www.BDTIC.com/TI

MEDIUM-BIAS MODE

electrical characteristics at specified free-air temperature (unless otherwise noted)

PARAMETER		TEST CONDITIONS	T_A†	TLC271M						UNIT
				V_{DD} = 5 V			V_{DD} = 10 V			
				MIN	TYP	MAX	MIN	TYP	MAX	
V_{IO}	Input offset voltage	V_O = 1.4 V, V_{IC} = 0 V, R_S = 50 Ω, R_L = 100 kΩ	25°C		1.1	10		1.1	10	mV
			Full range			12			12	
α_{VIO}	Average temperature coefficient of input offset voltage		25°C to 125°C		1.7			2.1		µV/°C
I_{IO}	Input offset current (see Note 4)	$V_O = V_{DD}/2$, $V_{IC} = V_{DD}/2$	25°C		0.1	60		0.1	60	pA
			125°C		1.4	15		1.8	15	nA
I_{IB}	Input bias current (see Note 4)	$V_O = V_{DD}/2$, $V_{IC} = V_{DD}/2$	25°C		0.6	60		0.7	60	pA
			125°C		9	35		10	35	nA
V_{ICR}	Common-mode input voltage range (see Note 5)		25°C	0 to 4	–0.3 to 4.2		0 to 9	–0.3 to 9.2		V
			Full range	0 to 3.5			0 to 8.5			V
V_{OH}	High-level output voltage	V_{ID} = 100 mV, R_L = 100 kΩ	25°C	3.2	3.9		8	8.7		V
			–55°C	3	3.9		7.8	8.6		
			125°C	3	4		7.8	8.6		
V_{OL}	Low-level output voltage	V_{ID} = –100 mV, I_{OL} = 0	25°C		0	50		0	50	mV
			–55°C		0	50		0	50	
			125°C		0	50		0	50	
A_{VD}	Large-signal differential voltage amplification	R_L = 10 kΩ See Note 6	25°C	25	170		25	275		V/mV
			–55°C	15	290		15	420		
			125°C	15	120		15	190		
CMRR	Common-mode rejection ratio	$V_{IC} = V_{ICR}$min	25°C	65	91		65	94		dB
			–55°C	60	89		60	93		
			125°C	60	91		60	93		
k_{SVR}	Supply-voltage rejection ratio ($\Delta V_{DD}/\Delta V_{IO}$)	V_{DD} = 5 V to 10 V V_O = 1.4 V	25°C	70	93		70	93		dB
			–55°C	60	91		60	91		
			125°C	60	94		60	94		
$I_{I(SEL)}$	Input current (BIAS SELECT)	$V_{I(SEL)} = V_{DD}/2$	25°C		–130			–160		nA
I_{DD}	Supply current	$V_O = V_{DD}/2$, $V_{IC} = V_{DD}/2$, No load	25°C		105	280		143	300	µA
			–55°C		170	440		245	500	
			125°C		70	180		90	240	

† Full range is –55°C to 125°C.

NOTES: 4. The typical values of input bias current and input offset current below 5 pA were determined mathematically.
5. This range also applies to each input individually.
6. At V_{DD} = 5 V, V_O = 0.25 V to 2 V; at V_{DD} = 10 V, V_O = 1 V to 6 V.

www.BDTIC.com/TI

MEDIUM-BIAS MODE

operating characteristics at specified free-air temperature, V_{DD} = 5 V

PARAMETER		TEST CONDITIONS		T_A	TLC271C, TLC271AC, TLC271BC MIN	TYP	MAX	UNIT
SR	Slew rate at unity gain	R_L = 100 kΩ, C_L = 20 pF, See Figure 98	$V_{I(PP)}$ = 1 V	25°C		0.43		V/µs
				0°C		0.46		
				70°C		0.36		
			$V_{I(PP)}$ = 2.5 V	25°C		0.40		
				0°C		0.43		
				70°C		0.34		
V_n	Equivalent input noise voltage	f = 1 kHz, See Figure 99	R_S = 20 Ω,	25°C		32		nV/√Hz
B_{OM}	Maximum output-swing bandwidth	$V_O = V_{OH}$, R_L = 100 kΩ,	C_L = 20 pF, See Figure 98	25°C		55		kHz
				0°C		60		
				70°C		50		
B_1	Unity-gain bandwidth	V_I = 10 mV, See Figure 100	C_L = 20 pF,	25°C		525		kHz
				0°C		600		
				70°C		400		
ϕ_m	Phase margin	V_I = 10 mV, C_L = 20 pF,	f = B_1, See Figure 100	25°C		40°		
				0°C		41°		
				70°C		39°		

operating characteristics at specified free-air temperature, V_{DD} = 10 V

PARAMETER		TEST CONDITIONS		T_A	TLC271C, TLC271AC, TLC271BC MIN	TYP	MAX	UNIT
SR	Slew rate at unity gain	R_L = 100 kΩ, C_L = 20 pF, See Figure 98	$V_{I(PP)}$ = 1 V	25°C		0.62		V/µs
				0°C		0.67		
				70°C		0.51		
			$V_{I(PP)}$ = 5.5 V	25°C		0.56		
				0°C		0.61		
				70°C		0.46		
V_n	Equivalent input noise voltage	f = 1 kHz, See Figure 99	R_S = 20 Ω,	25°C		32		nV/√Hz
B_{OM}	Maximum output-swing bandwidth	$V_O = V_{OH}$, R_L = 100 kΩ,	C_L = 20 pF, See Figure 98	25°C		35		kHz
				0°C		40		
				70°C		30		
B_1	Unity-gain bandwidth	V_I = 10 mV, See Figure 100	C_L = 20 pF,	25°C		635		kHz
				0°C		710		
				70°C		510		
ϕ_m	Phase margin	V_I = 10 mV, C_L = 20 pF,	f = B_1, See Figure 100	25°C		43°		
				0°C		44°		
				70°C		42°		

www.BDTIC.com/TI

MEDIUM-BIAS MODE

operating characteristics at specified free-air temperature, V_{DD} = 5 V

PARAMETER		TEST CONDITIONS		T_A	TLC271I, TLC271AI, TLC271BI MIN	TYP	MAX	UNIT
SR	Slew rate at unity gain	R_L = 100 kΩ, C_L = 20 pF, See Figure 98	$V_{I(PP)}$ = 1 V	25°C		0.43		V/µs
				–40°C		0.51		
				85°C		0.35		
			$V_{I(PP)}$ = 2.5 V	25°C		0.40		
				–40°C		0.48		
				85°C		0.32		
V_n	Equivalent input noise voltage	f = 1 kHz, See Figure 99	R_S = 20 Ω,	25°C		32		nV/√Hz
B_{OM}	Maximum output-swing bandwidth	$V_O = V_{OH}$, R_L = 100 kΩ,	C_L = 20 pF, See Figure 98	25°C		55		kHz
				–40°C		75		
				85°C		45		
B_1	Unity-gain bandwidth	V_I = 10 mV, See Figure 100	C_L = 20 pF,	25°C		525		MHz
				–40°C		770		
				85°C		370		
ϕ_m	Phase margin	V_I = 10 mV, C_L = 20 pF,	f = B_1, See Figure 100	25°C		40°		
				–40°C		43°		
				85°C		38°		

operating characteristics at specified free-air temperature, V_{DD} = 10 V

PARAMETER		TEST CONDITIONS		T_A	TLC271I, TLC271AI, TLC271BI MIN	TYP	MAX	UNIT
SR	Slew rate at unity gain	R_L = 100 kΩ, C_L = 20 pF, See Figure 98	$V_{I(PP)}$ = 1 V	25°C		0.62		V/µs
				–40°C		0.77		
				85°C		0.47		
			$V_{I(PP)}$ = 5.5 V	25°C		0.56		
				–40°C		0.70		
				85°C		0.44		
V_n	Equivalent input noise voltage	f = 1 kHz, See Figure 99	R_S = 20 Ω,	25°C		32		nV/√Hz
B_{OM}	Maximum output-swing bandwidth	$V_O = V_{OH}$,3 R_L = 100 kΩ,	C_L = 20 pF, See Figure 98	25°C		35		kHz
				–40°C		45		
				85°C		25		
B_1	Unity-gain bandwidth	V_I = 10 mV, See Figure 100	C_L = 20 pF,	25°C		635		kHz
				–40°C		880		
				85°C		480		
ϕ_m	Phase margin	V_I = 10 mV, C_L = 20 pF,	f = B_1, See Figure 100	25°C		43°		
				–40°C		46°		
				85°C		41°		

www.BDTIC.com/TI

MEDIUM-BIAS MODE

operating characteristics at specified free-air temperature, V_{DD} = 5 V

PARAMETER		TEST CONDITIONS		T_A	TLC271M MIN	TLC271M TYP	TLC271M MAX	UNIT
SR	Slew rate at unity gain	R_L = 100 kΩ, C_L = 20 pF, See Figure 98	$V_{I(PP)}$ = 1 V	25°C		0.43		V/µs
				–55°C		0.54		
				125°C		0.29		
			$V_{I(PP)}$ = 2.5 V	25°C		0.40		
				–55°C		0.50		
				125°C		0.28		
V_n	Equivalent input noise voltage	f = 1 kHz, See Figure 99	R_S = 20 Ω,	25°C		32		nV/√Hz
B_{OM}	Maximum output-swing bandwidth	$V_O = V_{OH}$, R_L = 100 kΩ,	C_L = 20 pF, See Figure 98	25°C		55		kHz
				–55°C		80		
				125°C		40		
B_1	Unity-gain bandwidth	V_I = 10 mV, See Figure 100	C_L = 20 pF,	25°C		525		kHz
				–55°C		850		
				125°C		330		
ϕ_m	Phase margin	V_I = 10 mV, C_L = 20 pF,	f = B_1, See Figure 100	25°C		40°		
				–55°C		43°		
				125°C		36°		

operating characteristics at specified free-air temperature, V_{DD} = 10 V

PARAMETER		TEST CONDITIONS		T_A	TLC271M MIN	TLC271M TYP	TLC271M MAX	UNIT
SR	Slew rate at unity gain	R_L = 100 kΩ, C_L = 20 pF, See Figure 98	$V_{I(PP)}$ = 1 V	25°C		0.62		V/µs
				–55°C		0.81		
				125°C		0.38		
			$V_{I(PP)}$ = 5.5 V	25°C		0.56		
				–55°C		0.73		
				125°C		0.35		
V_n	Equivalent input noise voltage	f = 1 kHz, See Figure 99	R_S = 20 Ω,	25°C		32		nV/√Hz
B_{OM}	Maximum output-swing bandwidth	$V_O = V_{OH}$, R_L = 100 kΩ,	C_L = 20 pF, See Figure 98	25°C		35		kHz
				–55°C		50		
				125°C		20		
B_1	Unity-gain bandwidth	V_I = 10 mV, See Figure 100	C_L = 20 pF,	25°C		635		kHz
				–55°C		960		
				125°C		440		
ϕ_m	Phase margin	V_I = 10 mV, C_L = 20 pF,	f = B_1, See Figure 100	25°C		43°		
				–55°C		47°		
				125°C		39°		

www.BDTIC.com/TI

TYPICAL CHARACTERISTICS (MEDIUM-BIAS MODE)

Table of Graphs

			FIGURE
V_{IO}	Input offset voltage	Distribution	34, 35
α_{VIO}	Temperature coefficient	Distribution	36, 37
V_{OH}	High-level output voltage	vs High-level output current vs Supply voltage vs Free-air temperature	38, 39 40 41
V_{OL}	Low-level output voltage	vs Common-mode input voltage vs Differential input voltage vs Free-air temperature vs Low-level output current	42, 43 44 45 46, 47
A_{VD}	Large-signal differential voltage amplification	vs Supply voltage vs Free-air temperature vs Frequency	48 49 60, 61
I_{IB}	Input bias current	vs Free-air temperature	50
I_{IO}	Input offset current	vs Free-air temperature	50
V_I	Maximum Input voltage	vs Supply voltage	51
I_{DD}	Supply current	vs Supply voltage vs Free-air temperature	52 53
SR	Slew rate	vs Supply voltage vs Free-air temperature	54 55
	Bias-select current	vs Supply voltage	56
$V_{O(PP)}$	Maximum peak-to-peak output voltage	vs Frequency	57
B_1	Unity-gain bandwidth	vs Free-air temperature vs Supply voltage	58 59
ϕ_m	Phase margin	vs Supply voltage vs Free-air temperature vs Capacitive load	62 63 64
V_n	Equivalent input noise voltage	vs Frequency	65
	Phase shift	vs Frequency	60, 61

www.BDTIC.com/TI

TYPICAL CHARACTERISTICS (MEDIUM-BIAS MODE)†

DISTRIBUTION OF TLC271 INPUT OFFSET VOLTAGE

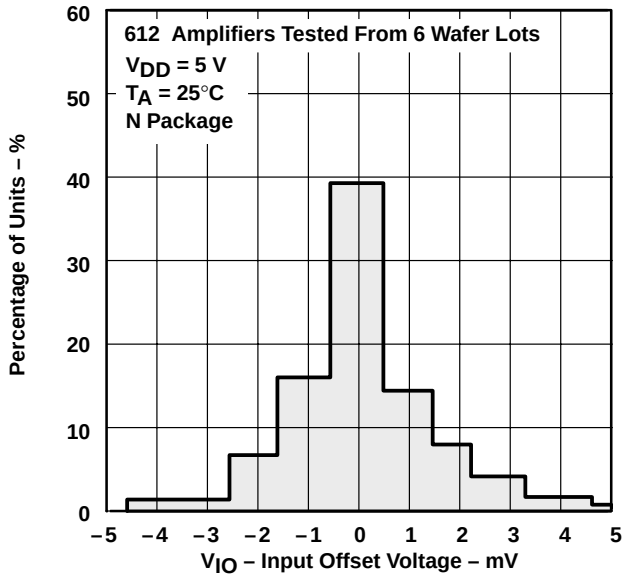

Figure 34

DISTRIBUTION OF TLC271 INPUT OFFSET VOLTAGE

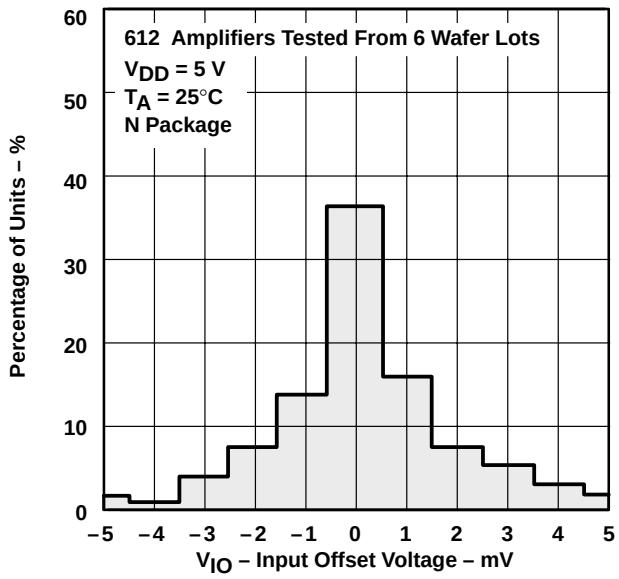

Figure 35

DISTRIBUTION OF TLC271 INPUT OFFSET VOLTAGE TEMPERATURE COEFFICIENT

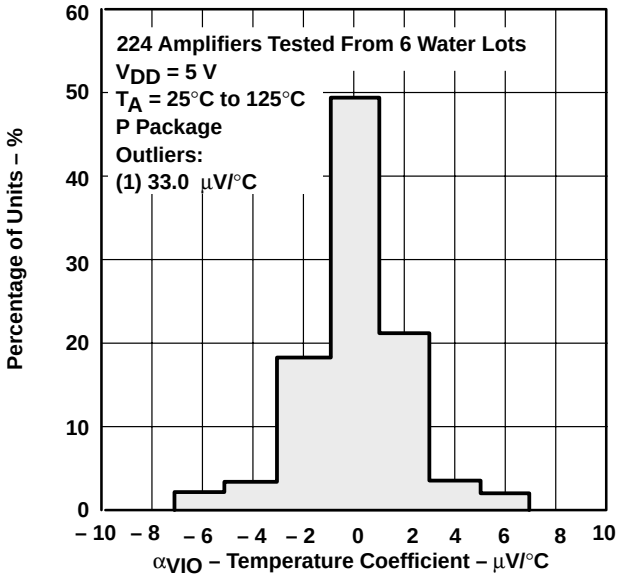

Figure 36

DISTRIBUTION OF TLC271 INPUT OFFSET VOLTAGE TEMPERATURE COEFFICIENT

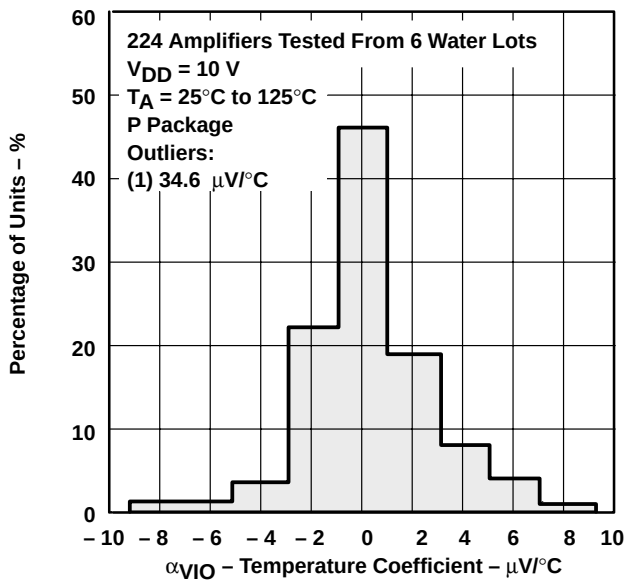

Figure 37

† Data at high and low temperatures are applicable only within the rated operating free-air temperature ranges of the various devices.

www.BDTIC.com/TI

TYPICAL CHARACTERISTICS (MEDIUM-BIAS MODE)†

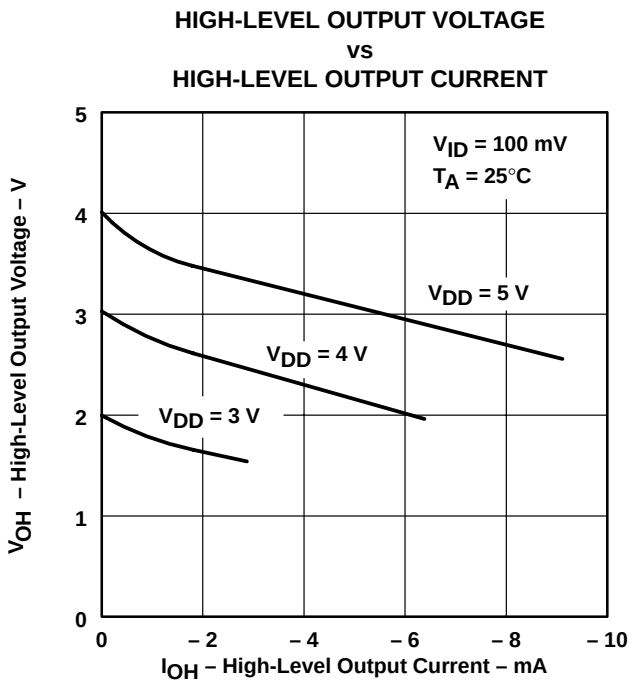

Figure 38

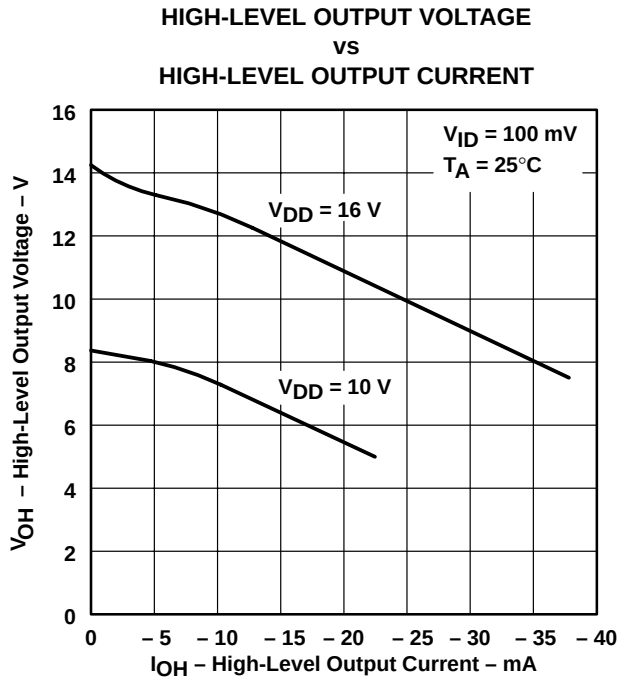

Figure 39

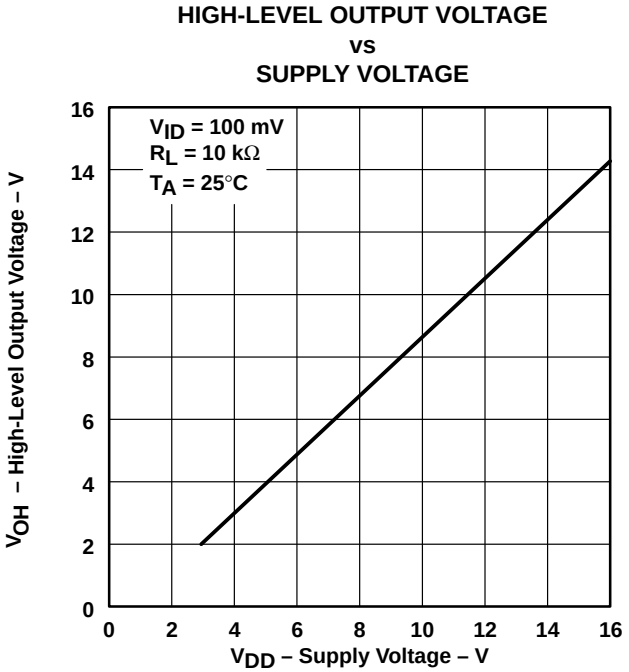

Figure 40

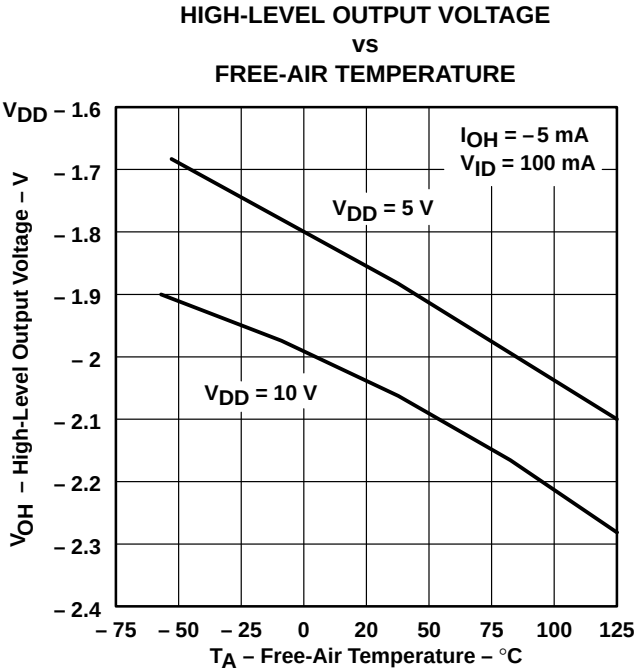

Figure 41

† Data at high and low temperatures are applicable only within the rated operating free-air temperature ranges of the various devices.

www.BDTIC.com/TI

TYPICAL CHARACTERISTICS (MEDIUM-BIAS MODE)†

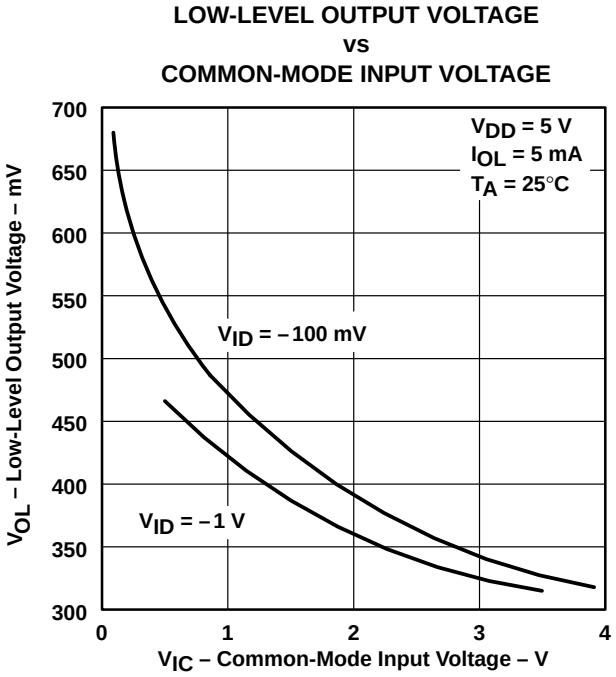

Figure 42

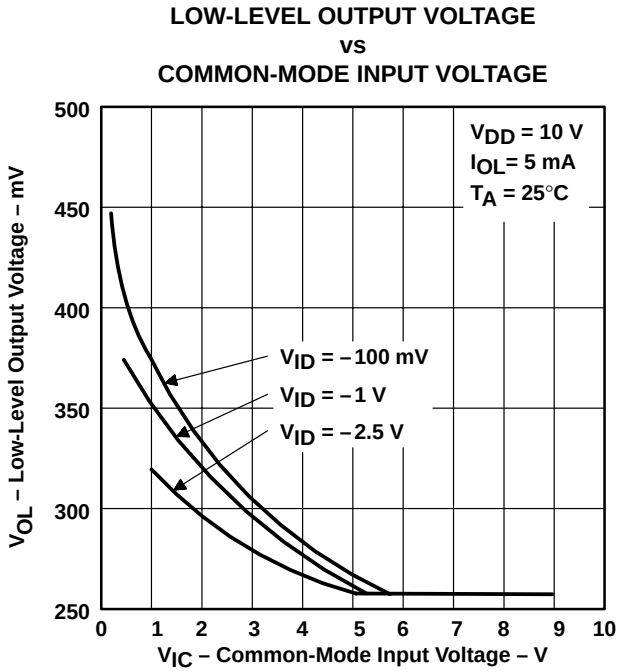

Figure 43

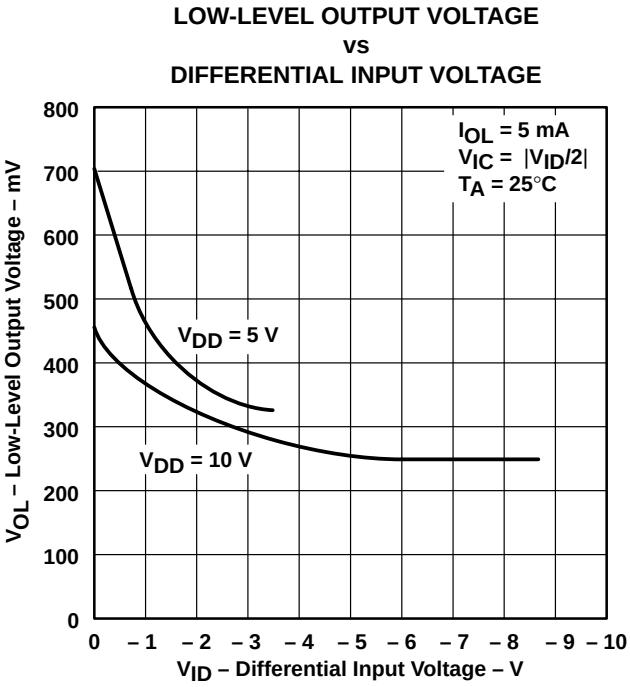

Figure 44

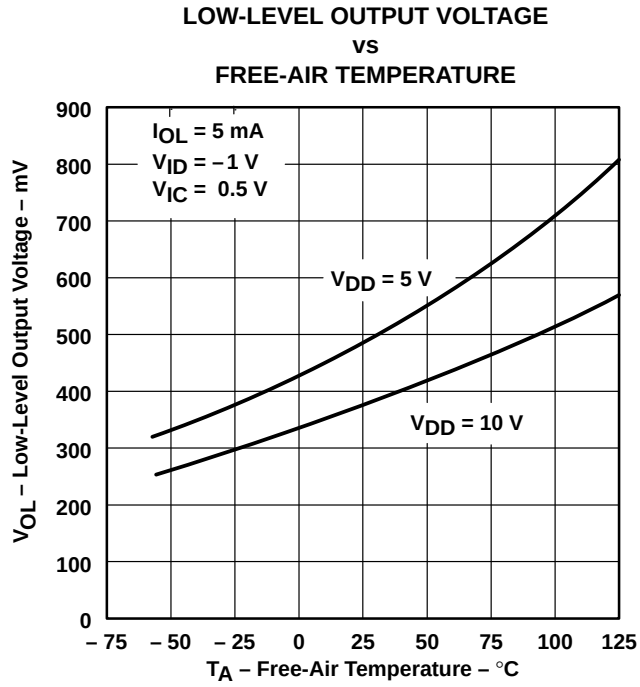

Figure 45

† Data at high and low temperatures are applicable only within the rated operating free-air temperature ranges of the various devices.

www.BDTIC.com/TI

TYPICAL CHARACTERISTICS (MEDIUM-BIAS MODE)†

LOW-LEVEL OUTPUT VOLTAGE vs LOW-LEVEL OUTPUT CURRENT

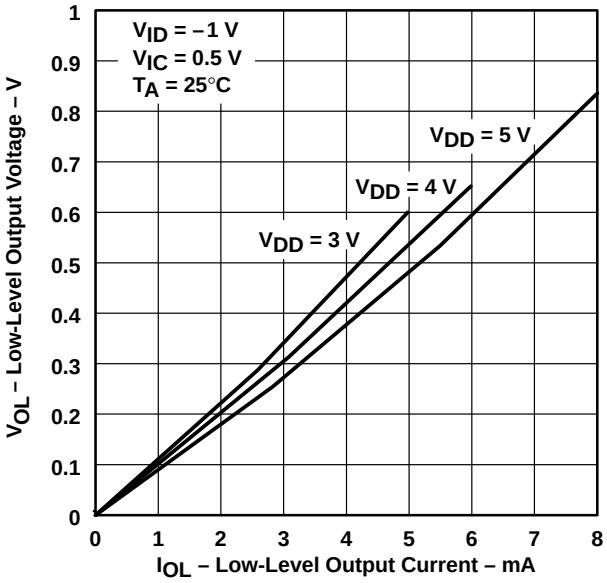

Figure 46

LOW-LEVEL OUTPUT VOLTAGE vs LOW-LEVEL OUTPUT CURRENT

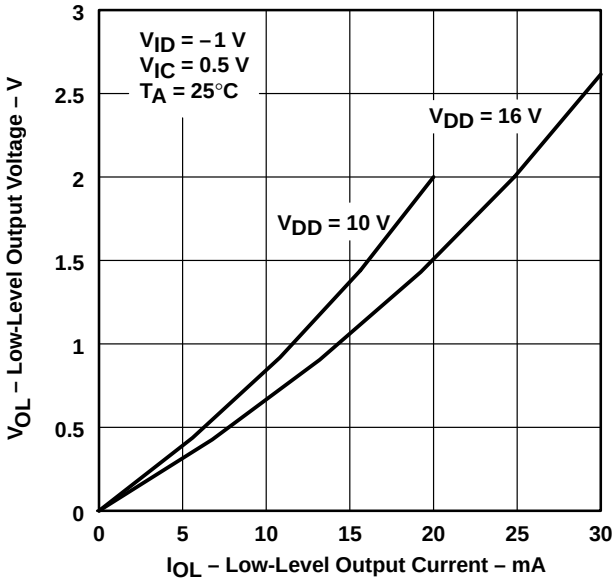

Figure 47

LARGE-SIGNAL DIFFERENTIAL VOLTAGE AMPLIFICATION vs SUPPLY VOLTAGE

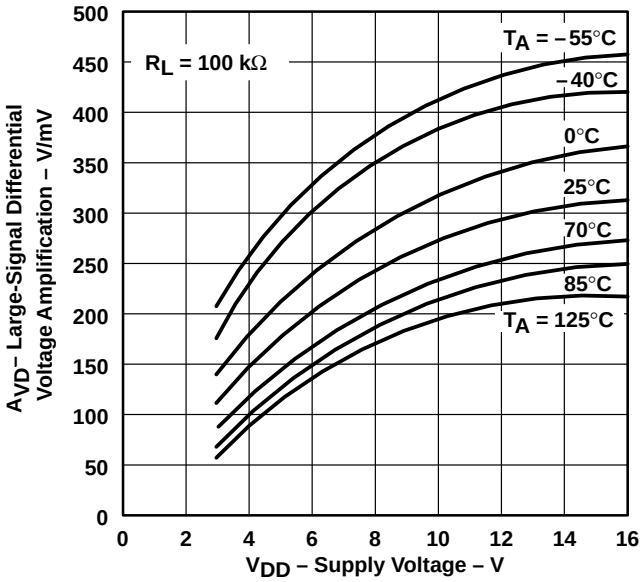

Figure 48

LARGE-SIGNAL DIFFERENTIAL VOLTAGE AMPLIFICATION vs FREE-AIR TEMPERATURE

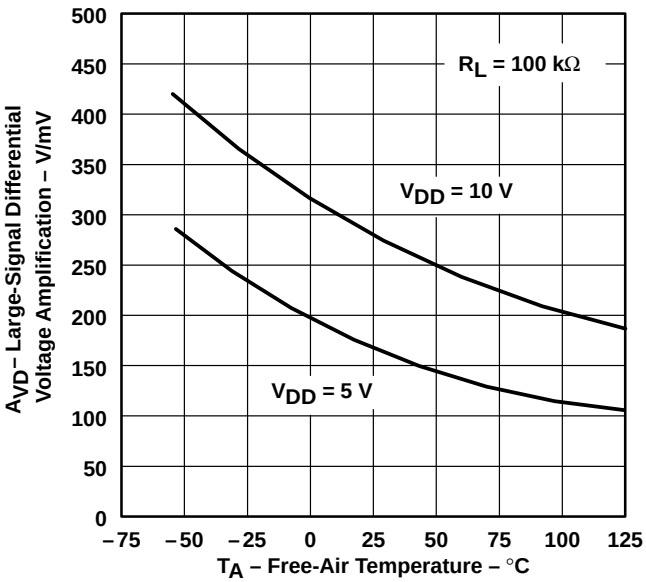

Figure 49

† Data at high and low temperatures are applicable only within the rated operating free-air temperature ranges of the various devices.

www.BDTIC.com/TI

TYPICAL CHARACTERISTICS (MEDIUM-BIAS MODE)†

INPUT BIAS CURRENT AND INPUT OFFSET CURRENT vs FREE-AIR TEMPERATURE

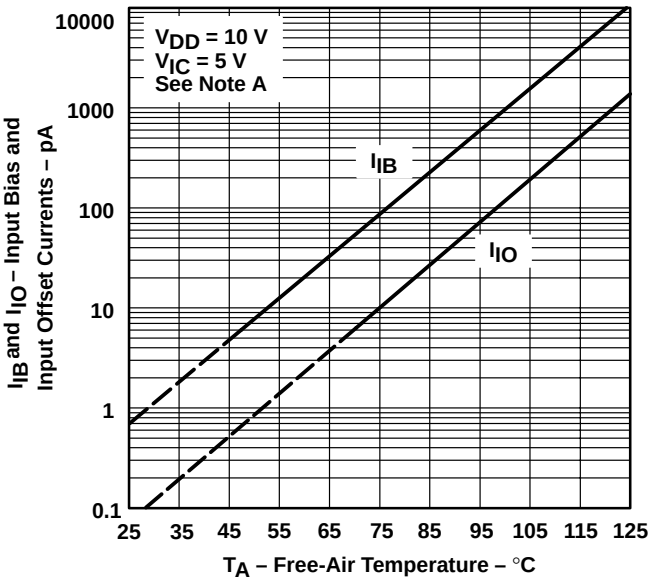

NOTE A: The typical values of input bias current and input offset current below 5 pA were determined mathematically.

Figure 50

MAXIMUM INPUT VOLTAGE vs SUPPLY VOLTAGE

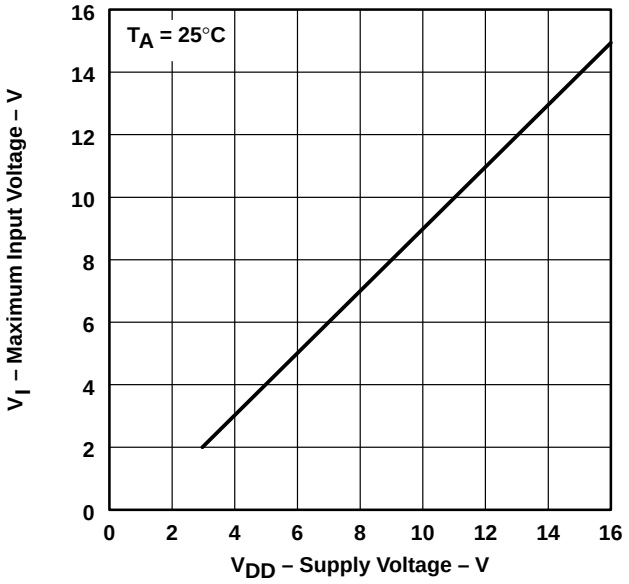

Figure 51

SUPPLY CURRENT vs SUPPLY VOLTAGE

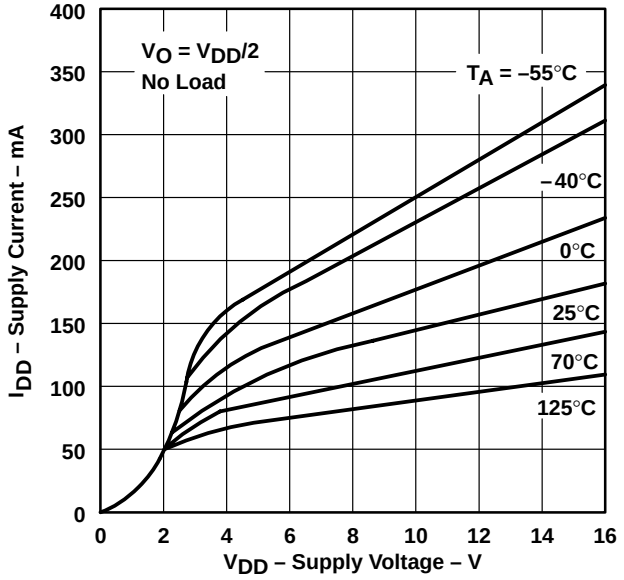

Figure 52

SUPPLY CURRENT vs FREE-AIR TEMPERATURE

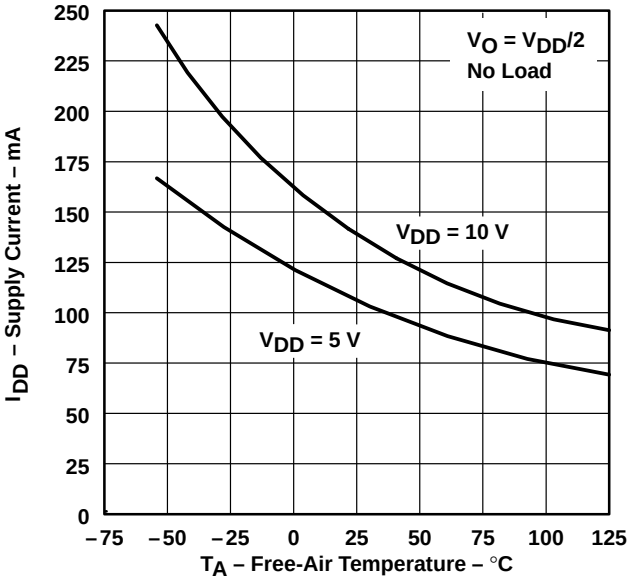

Figure 53

† Data at high and low temperatures are applicable only within the rated operating free-air temperature ranges of the various devices.

www.BDTIC.com/TI

TYPICAL CHARACTERISTICS (MEDIUM-BIAS MODE)†

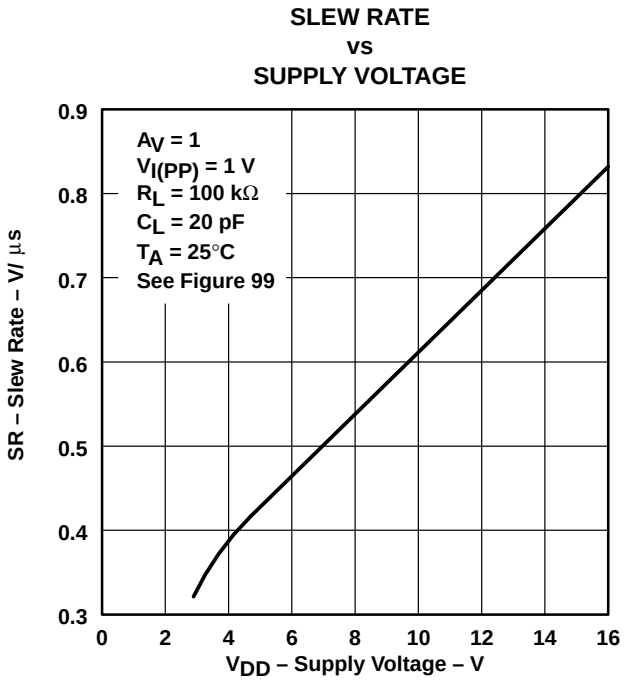

Figure 54

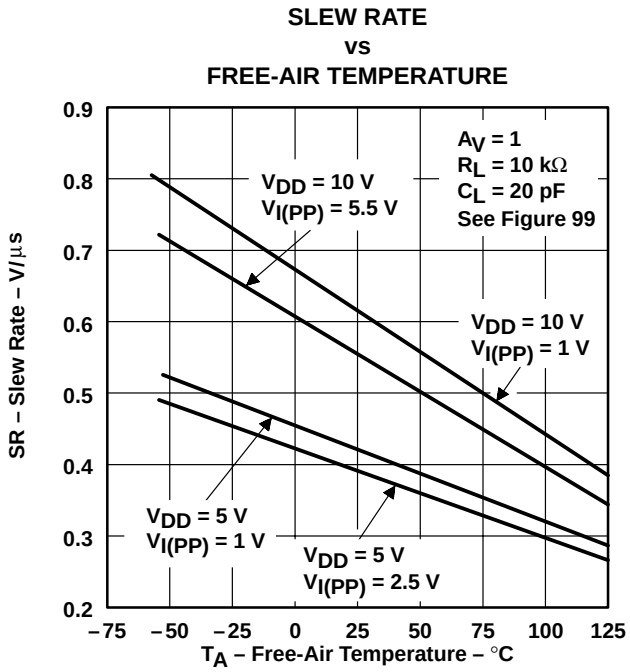

Figure 55

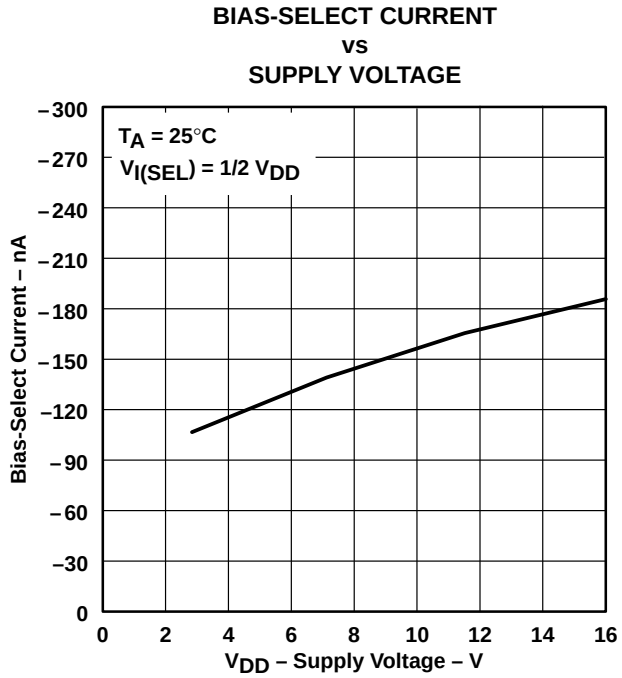

Figure 56

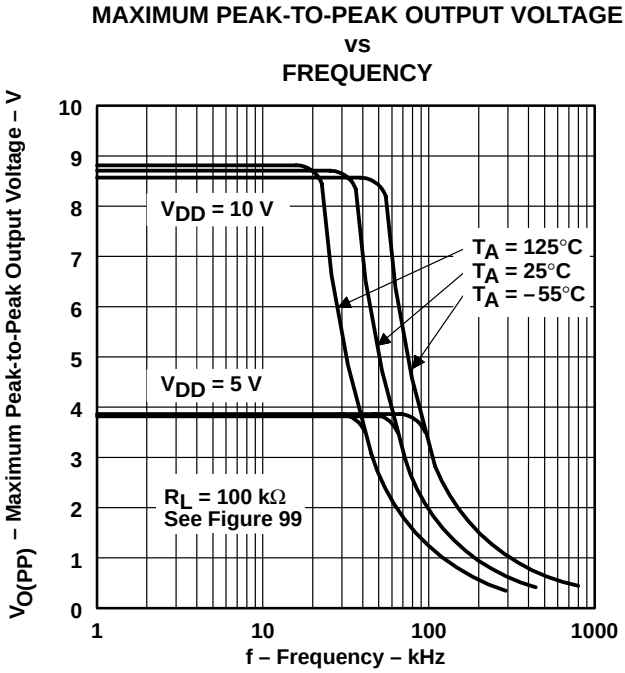

Figure 57

† Data at high and low temperatures are applicable only within the rated operating free-air temperature ranges of the various devices.

www.BDTIC.com/TI

TYPICAL CHARACTERISTICS (MEDIUM-BIAS MODE)†

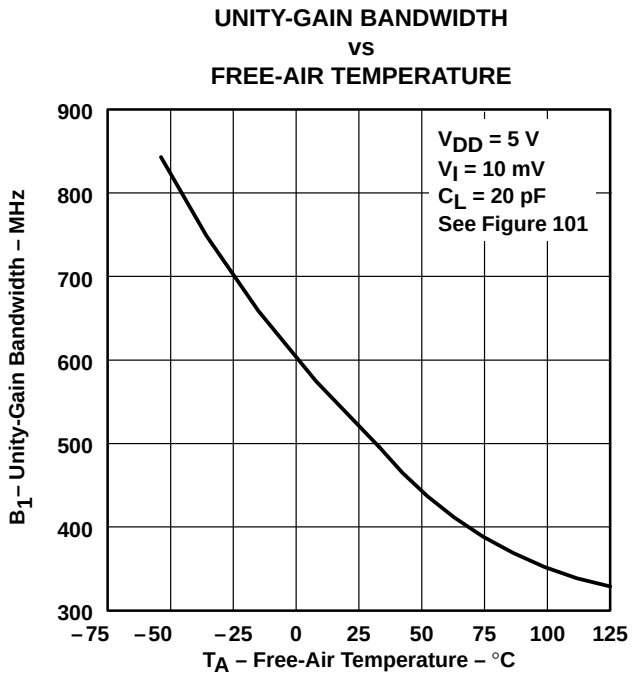

Figure 58

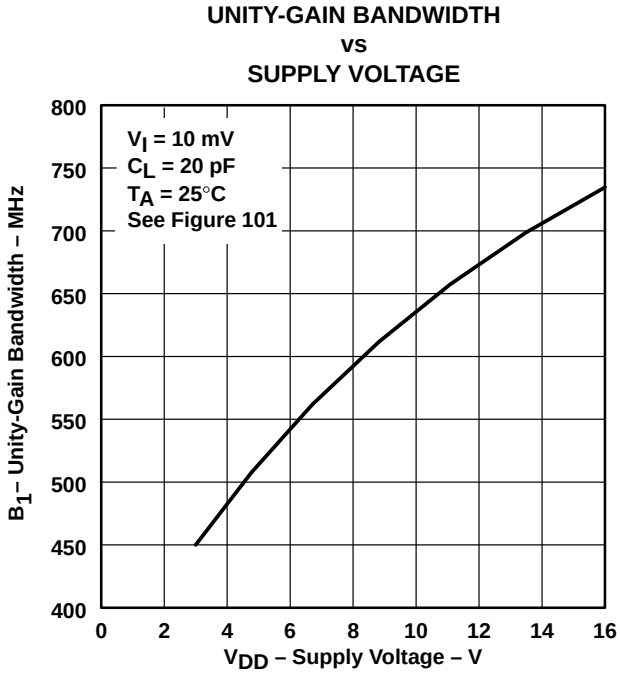

Figure 59

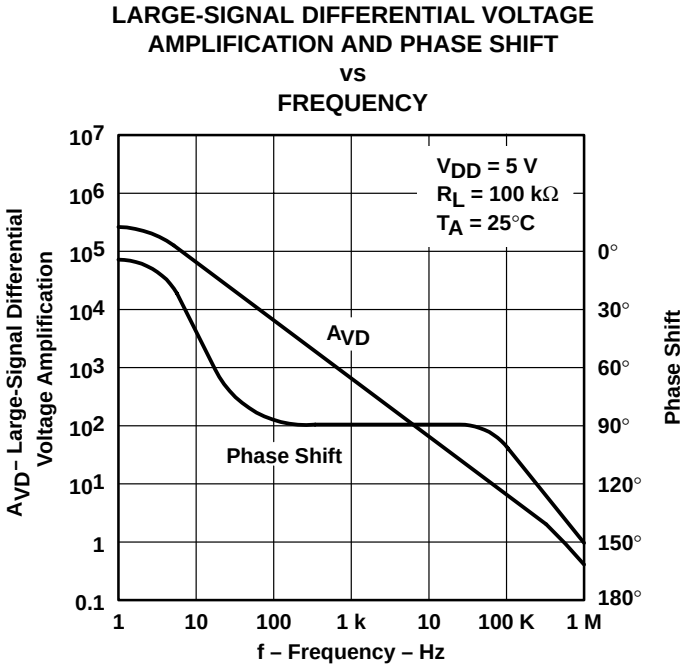

Figure 60

† Data at high and low temperatures are applicable only within the rated operating free-air temperature ranges of the various devices.

www.BDTIC.com/TI

TYPICAL CHARACTERISTICS (MEDIUM-BIAS MODE)†

LARGE-SIGNAL DIFFERENTIAL VOLTAGE AMPLIFICATION AND PHASE SHIFT vs FREQUENCY

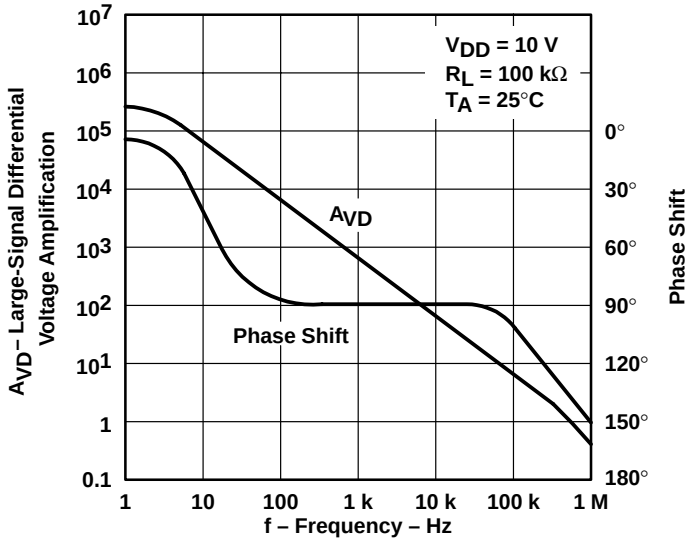

Figure 61

PHASE MARGIN vs SUPPLY VOLTAGE

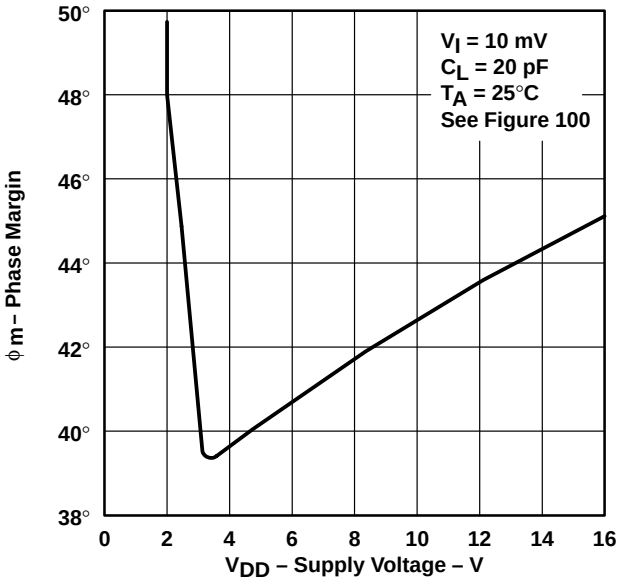

Figure 62

PHASE MARGIN vs FREE-AIR TEMPERATURE

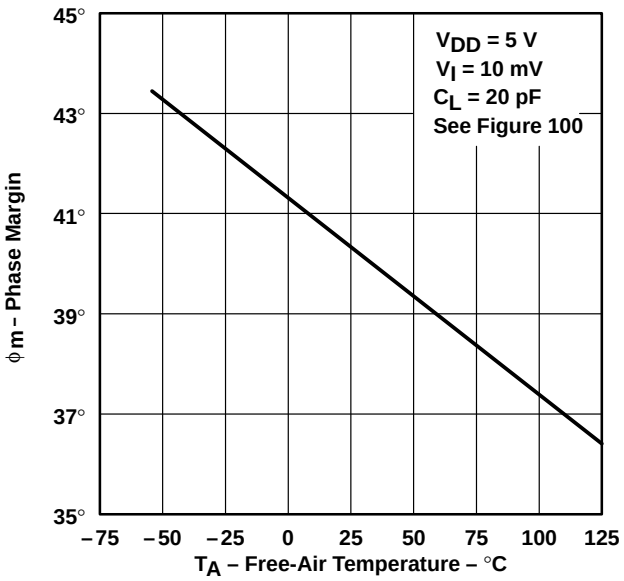

Figure 63

† Data at high and low temperatures are applicable only within the rated operating free-air temperature ranges of the various devices.

www.BDTIC.com/TI

TYPICAL CHARACTERISTICS (MEDIUM-BIAS MODE)†

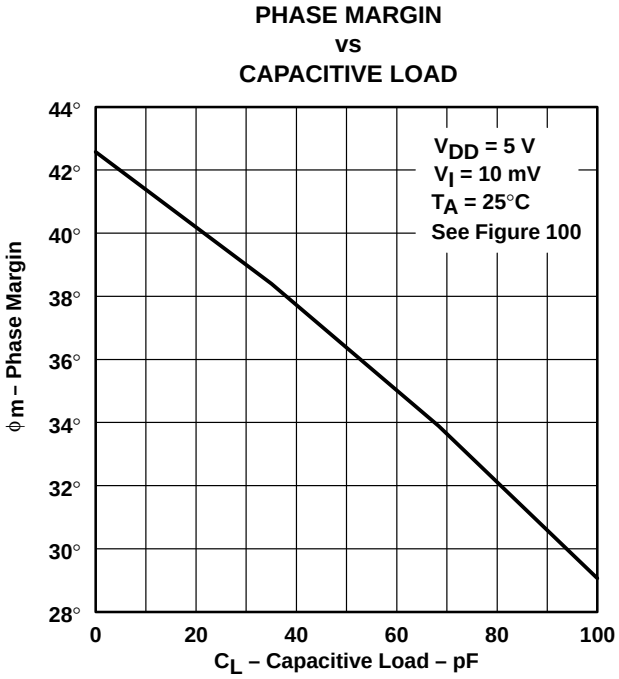

Figure 64

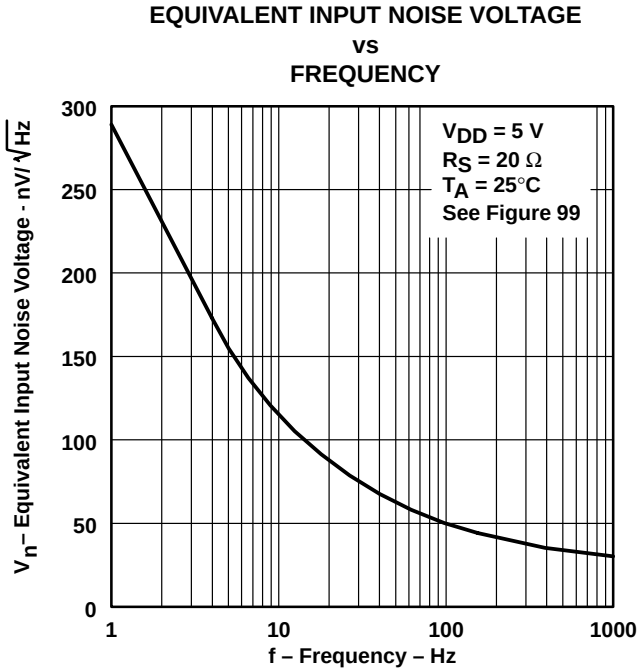

Figure 65

† Data at high and low temperatures are applicable only within the rated operating free-air temperature ranges of the various devices.

www.BDTIC.com/TI

LOW-BIAS MODE

electrical characteristics at specified free-air temperature (unless otherwise noted)

PARAMETER			TEST CONDITIONS	T_A†	TLC271C, TLC271AC, TLC271BC						UNIT
					V_{DD} = 5 V			V_{DD} = 10 V			
					MIN	TYP	MAX	MIN	TYP	MAX	
V_{IO}	Input offset voltage	TLC271C	V_O = 1.4 V, V_{IC} = 0 V, R_S = 50 Ω, R_I = 1 MΩ	25°C		1.1	10		1.1	10	mV
				Full range			12			12	
		TLC271AC		25°C		0.9	5		0.9	5	
				Full range			6.5			6.5	
		TLC271BC		25°C		0.24	2		0.26	2	
				Full range			3			3	
α_{VIO}	Average temperature coefficient of input offset voltage			25°C to 70°C		1.1			1		µV/°C
I_{IO}	Input offset current (see Note 4)		$V_O = V_{DD}/2$, $V_{IC} = V_{DD}/2$	25°C		0.1	60		0.1	60	pA
				70°C		7	300		8	300	
I_{IB}	Input bias current (see Note 4)		$V_O = V_{DD}/2$, $V_{IC} = V_{DD}/2$	25°C		0.6	60		0.7	60	pA
				70°C		40	600		50	600	
V_{ICR}	Common-mode input voltage range (see Note 5)			25°C	–0.2 to 4	–0.3 to 4.2		–0.2 to 9	–0.3 to 9.2		V
				Full range	–0.2 to 3.5			–0.2 to 8.5			V
V_{OH}	High-level output voltage		V_{ID} = 100 mV, R_L = 1 MΩ	25°C	3.2	4.1		8	8.9		V
				0°C	3	4.1		7.8	8.9		
				70°C	3	4.2		7.8	8.9		
V_{OL}	Low-level output voltage		V_{ID} = –100 mV, I_{OL} = 0	25°C		0	50		0	50	mV
				0°C		0	50		0	50	
				70°C		0	50		0	50	
A_{VD}	Large-signal differential voltage amplification		R_L = 1 MΩ, See Note 6	25°C	50	520		50	870		V/mV
				0°C	50	700		50	1030		
				70°C	50	380		50	660		
CMRR	Common-mode rejection ratio		$V_{IC} = V_{ICR}$min	25°C	65	94		65	97		dB
				0°C	60	95		60	97		
				70°C	60	95		60	97		
k_{SVR}	Supply-voltage rejection ratio ($\Delta V_{DD}/\Delta V_{IO}$)		V_{DD} = 5 V to 10 V V_O = 1.4 V	25°C	70	97		70	97		dB
				0°C	60	97		60	97		
				70°C	60	98		60	98		
$I_{I(SEL)}$	Input current (BIAS SELECT)		$V_{I(SEL)} = V_{DD}$	25°C		65			95		nA
I_{DD}	Supply current		$V_O = V_{DD}/2$, $V_{IC} = V_{DD}/2$, No load	25°C		10	17		14	23	µA
				0°C		12	21		18	33	
				70°C		8	14		11	20	

† Full range is 0°C to 70°C.

NOTES: 4. The typical values of input bias current and input offset current below 5 pA were determined mathematically.
5. This range also applies to each input individually.
6. At V_{DD} = 5 V, V_O = 0.25 V to 2 V; at V_{DD} = 10 V, V_O = 1 V to 6 V.

www.BDTIC.com/TI

LOW-BIAS MODE

electrical characteristics at specified free-air temperature (unless otherwise noted)

PARAMETER			TEST CONDITIONS	T_A†	TLC271I, TLC271AI, TLC271BI						UNIT
					V_{DD} = 5 V			V_{DD} = 10 V			
					MIN	TYP	MAX	MIN	TYP	MAX	
V_{IO}	Input offset voltage	TLC271I	V_O = 1.4 V, V_{IC} = 0 V, R_S = 50 Ω, R_L = 1 MΩ	25°C		1.1	10		1.1	10	mV
				Full range			13			13	
		TLC271AI		25°C		0.9	5		0.9	5	
				Full range			7			7	
		TLC271BI		25°C		0.24	2		0.26	2	
				Full range			3.5			3.5	
α_{VIO}	Average temperature coefficient of input offset voltage			25°C to 85°C		1.1			1		µV/°C
I_{IO}	Input offset current (see Note 4)		$V_O = V_{DD}/2$, $V_{IC} = V_{DD}/2$	25°C		0.1	60		0.1	60	pA
				85°C		24	1000		26	1000	
I_{IB}	Input bias current (see Note 4)		$V_O = V_{DD}/2$, $V_{IC} = V_{DD}/2$	25°C		0.6	60		0.7	60	pA
				85°C		200	2000		220	2000	
V_{ICR}	Common-mode input voltage range (see Note 5)			25°C	−0.2 to 4	−0.3 to 4.2		−0.2 to 9	−0.3 to 9.2		V
				Full range	−0.2 to 3.5			−0.2 to 8.5			V
V_{OH}	High-level output voltage		V_{ID} = 100 mV, R_L = 1 MΩ	25°C	3	4.1		8	8.9		V
				−40°C	3	4.1		7.8	8.9		
				85°C	3	4.2		7.8	8.9		
V_{OL}	Low-level output voltage		V_{ID} = −100 mV, I_{OL} = 0	25°C		0	50		0	50	mV
				−40°C		0	50		0	50	
				85°C		0	50		0	50	
A_{VD}	Large-signal differential voltage amplification		R_L = 1 MΩ See Note 6	25°C	50	520		50	870		V/mV
				−40°C	50	900		50	1550		
				85°C	50	330		50	585		
CMRR	Common-mode rejection ratio		$V_{IC} = V_{ICR}$min	25°C	65	94		65	97		dB
				−40°C	60	95		60	97		
				85°C	60	95		60	98		
k_{SVR}	Supply-voltage rejection ratio ($\Delta V_{DD}/\Delta V_{IO}$)		V_{DD} = 5 V to 10 V V_O = 1.4 V	25°C	70	97		70	97		dB
				−40°C	60	97		60	97		
				85°C	60	98		60	98		
$I_{I(SEL)}$	Input current (BIAS SELECT)		$V_{I(SEL)} = V_{DD}$	25°C		65			95		nA
I_{DD}	Supply current		$V_O = V_{DD}/2$, $V_{IC} = V_{DD}/2$, No load	25°C		10	17		14	23	µA
				−40°C		16	27		25	43	
				85°C		17	13		10	18	

† Full range is −40 to 85°C.

NOTES: 4. The typical values of input bias current and input offset current below 5 pA were determined mathematically.
5. This range also applies to each input individually.
6. At V_{DD} = 5 V, V_O = 0.25 V to 2 V; at V_{DD} = 10 V, V_O = 1 V to 6 V.

www.BDTIC.com/TI

LOW-BIAS MODE

electrical characteristics at specified free-air temperature (unless otherwise noted)

PARAMETER		TEST CONDITIONS	T_A†	TLC271M						UNIT
				V_{DD} = 5 V			V_{DD} = 10 V			
				MIN	TYP	MAX	MIN	TYP	MAX	
V_{IO}	Input offset voltage	V_O = 1.4 V, V_{IC} = 0 V, R_S = 50 Ω, R_L = 1 MΩ	25°C		1.1	10		1.1	10	mV
			Full range			12			12	
α_{VIO}	Average temperature coefficient of input offset voltage		25°C to 125°C		1.4			1.4		µV/°C
I_{IO}	Input offset current (see Note 4)	$V_O = V_{DD}/2$, $V_{IC} = V_{DD}/2$	25°C		0.1	60		0.1	60	pA
			125°C		1.4	15		1.8	15	nA
I_{IB}	Input bias current (see Note 4)	$V_O = V_{DD}/2$, $V_{IC} = V_{DD}/2$	25°C		0.6	60		0.7	60	pA
			125°C		9	35		10	35	nA
V_{ICR}	Common-mode input voltage range (see Note 5)		25°C	0 to 4	–0.3 to 4.2		0 to 9	–0.3 to 9.2		V
			Full range	0 to 3.5			0 to 8.5			V
V_{OH}	High-level output voltage	V_{ID} = 100 mV, R_L = 1 MΩ	25°C	3.2	4.1		8	8.9		V
			–55°C	3	4.1		7.8	8.8		
			125°C	3	4.2		7.8	9		
V_{OL}	Low-level output voltage	V_{ID} = –100 mV, I_{OL} = 0	25°C		0	50		0	50	mV
			–55°C		0	50		0	50	
			125°C		0	50		0	50	
A_{VD}	Large-signal differential voltage amplification	R_L = 1 MΩ, See Note 6	25°C	50	520		50	870		V/mV
			–55°C	25	1000		25	1775		
			125°C	25	200		25	380		
CMRR	Common-mode rejection ratio	$V_{IC} = V_{ICR}$min	25°C	65	94		65	97		dB
			–55°C	60	95		60	97		
			125°C	60	85		60	91		
k_{SVR}	Supply-voltage rejection ratio ($\Delta V_{DD}/\Delta V_{IO}$)	V_{DD} = 5 V to 10 V V_O = 1.4 V	25°C	70	97		70	97		dB
			–55°C	60	97		60	97		
			125°C	60	98		60	98		
$I_{I(SEL)}$	Input current (BIAS SELECT)	$V_{I(SEL)} = V_{DD}$	25°C		65			95		nA
I_{DD}	Supply current	$V_O = V_{DD}/2$, $V_{IC} = V_{DD}/2$, No load	25°C		10	17		14	23	µA
			–55°C		17	30		28	48	
			125°C		7	12		9	15	

† Full range is –55°C to 125°C.

NOTES: 4. The typical values of input bias current and input offset current below 5 pA were determined mathematically.
5. This range also applies to each input individually.
6. At V_{DD} = 5 V, V_O = 0.25 V to 2 V; at V_{DD} = 10 V, V_O = 1 V to 6 V.

www.BDTIC.com/TI

LOW-BIAS MODE

operating characteristics at specified free-air temperature, V_{DD} = 5 V

PARAMETER		TEST CONDITIONS		T_A	TLC271C, TLC271AC, TLC271BC MIN	TYP	MAX	UNIT
SR	Slew rate at unity gain	R_L = 1 MΩ, C_L = 20 pF, See Figure 98	$V_{I(PP)}$ = 1 V	25°C		0.03		V/µs
				0°C		0.04		
				70°C		0.03		
			$V_{I(PP)}$ = 2.5 V	25°C		0.03		
				0°C		0.03		
				70°C		0.02		
V_n	Equivalent input noise voltage	f = 1 kHz, See Figure 99	R_S = 20 Ω,	25°C		68		nV/√Hz
B_{OM}	Maximum output-swing bandwidth	$V_O = V_{OH}$, R_L = 1 MΩ,	C_L = 20 pF, See Figure 98	25°C		5		kHz
				0°C		6		
				70°C		4.5		
B_1	Unity-gain bandwidth	V_I = 10 mV, See Figure 100	C_L = 20 pF,	25°C		85		kHz
				0°C		100		
				70°C		65		
ϕ_m	Phase margin	V_I = 10 mV, C_L = 20 pF,	f = B_1, See Figure 100	25°C		34°		
				0°C		36°		
				70°C		30°		

operating characteristics at specified free-air temperature, V_{DD} = 10 V

PARAMETER		TEST CONDITIONS		T_A	TLC271C, TLC271AC, TLC271BC MIN	TYP	MAX	UNIT
SR	Slew rate at unity gain	R_L = 1 MΩ, C_L = 20 pF, See Figure 98	$V_{I(PP)}$ = 1 V	25°C		0.05		V/µs
				0°C		0.05		
				70°C		0.04		
			$V_{I(PP)}$ = 5.5 V	25°C		0.04		
				0°C		0.05		
				70°C		0.04		
V_n	Equivalent input noise voltage	f = 1 kHz, See Figure 99	R_S = 20 Ω,	25°C		68		nV/√Hz
B_{OM}	Maximum output-swing bandwidth	$V_O = V_{OH}$, R_L = 1 MΩ,	C_L = 20 pF, See Figure 98	25°C		1		kHz
				0°C		1.3		
				70°C		0.9		
B_1	Unity-gain bandwidth	V_I = 10 mV, See Figure 100	C_L = 20 pF,	25°C		110		kHz
				0°C		125		
				70°C		90		
ϕ_m	Phase margin	V_I = 10 mV, C_L = 20 pF,	f = B_1, See Figure 100	25°C		38°		
				0°C		40°		
				70°C		34°		

www.BDTIC.com/TI

LOW-BIAS MODE

operating characteristics at specified free-air temperature, V_{DD} = 5 V

PARAMETER		TEST CONDITIONS		T_A	TLC271I, TLC271AI, TLC271BI MIN	TYP	MAX	UNIT
SR	Slew rate at unity gain	R_L = 1 MΩ, C_L = 20 pF, See Figure 98	$V_{I(PP)}$ = 1 V	25°C		0.03		V/µs
				–40°C		0.04		
				85°C		0.03		
			$V_{I(PP)}$ = 2.5 V	25°C		0.03		
				–40°C		0.04		
				85°C		0.02		
V_n	Equivalent input noise voltage	f = 1 kHz, See Figure 99	R_S = 20 Ω,	25°C		68		nV/√Hz
B_{OM}	Maximum output-swing bandwidth	$V_O = V_{OH}$, R_L = 1 MΩ,	C_L = 20 pF, See Figure 98	25°C		5		kHz
				–40°C		7		
				85°C		4		
B_1	Unity-gain bandwidth	V_I = 10 mV, See Figure 100	C_L = 20 pF,	25°C		85		MHz
				–40°C		130		
				85°C		55		
ϕ_m	Phase margin	V_I = 10 mV, C_L = 20 pF,	f = B_1, See Figure 100	25°C		34°		
				–40°C		38°		
				85°C		28°		

operating characteristics at specified free-air temperature, V_{DD} = 10 V

PARAMETER		TEST CONDITIONS		T_A	TLC271C, TLC271AC, TLC271BC MIN	TYP	MAX	UNIT
SR	Slew rate at unity gain	R_L = 1 MΩ, C_L = 20 pF, See Figure 98	$V_{I(PP)}$ = 1 V	25°C		0.05		V/µs
				–40°C		0.06		
				85°C		0.03		
			$V_{I(PP)}$ = 5.5 V	25°C		0.04		
				–40°C		0.05		
				85°C		0.03		
V_n	Equivalent input noise voltage	f = 1 kHz, See Figure 99	R_S = 20 Ω,	25°C		68		nV/√Hz
B_{OM}	Maximum output-swing bandwidth	$V_O = V_{OH}$, R_L = 1 MΩ,	C_L = 20 pF, See Figure 98	25°C		1		kHz
				–40°C		1.4		
				85°C		0.8		
B_1	Unity-gain bandwidth	V_I = 10 mV, See Figure 100	C_L = 20 pF,	25°C		110		MHz
				–40°C		155		
				85°C		80		
ϕ_m	Phase margin	V_I = 10 mV,I C_L = 20 pF,	f = B_1, See Figure 100	25°C		38°		
				–40°C		42°		
				85°C		32°		

www.BDTIC.com/TI

LOW-BIAS MODE

operating characteristics at specified free-air temperature, V_{DD} = 5 V

PARAMETER		TEST CONDITIONS		T_A	TLC271M MIN	TLC271M TYP	TLC271M MAX	UNIT
SR	Slew rate at unity gain	R_L = 1 MΩ, C_L = 20 pF, See Figure 98	$V_{I(PP)}$ = 1 V	25°C		0.03		V/µs
				–55°C		0.04		
				125°C		0.02		
			$V_{I(PP)}$ = 2.5 V	25°C		0.03		
				–55°C		0.04		
				125°C		0.02		
V_n	Equivalent input noise voltage	f = 1 kHz, See Figure 99	R_S = 20 Ω,	25°C		68		nV/√Hz
B_{OM}	Maximum output-swing bandwidth	$V_O = V_{OH}$, R_L = 1 MΩ,	C_L = 20 pF, See Figure 98	25°C		5		kHz
				–55°C		8		
				125°C		3		
B_1	Unity-gain bandwidth	V_I = 10 mV, See Figure 100	C_L = 20 pF,	25°C		85		kHz
				–55°C		140		
				125°C		45		
ϕ_m	Phase margin	V_I = 10 mV, C_L = 20 pF,	f = B_1, See Figure 100	25°C		34°		
				–55°C		39°		
				125°C		25°		

operating characteristics at specified free-air temperature, V_{DD} = 10 V

PARAMETER		TEST CONDITIONS		T_A	TLC271M MIN	TLC271M TYP	TLC271M MAX	UNIT
SR	Slew rate at unity gain	R_L = 1 MΩ, C_L = 20 pF, See Figure 98	$V_{I(PP)}$ = 1 V	25°C		0.05		V/µs
				–55°C		0.06		
				125°C		0.03		
			$V_{I(PP)}$ = 5.5 V	25°C		0.04		
				–55°C		0.06		
				125°C		0.03		
V_n	Equivalent input noise voltage	f = 1 kHz, See Figure 99	R_S = 20 Ω,	25°C		68		nV/√Hz
B_{OM}	Maximum output-swing bandwidth	$V_O = V_{OH}$, R_L = 1 MΩ,	C_L = 20 pF, See Figure 98	25°C		1		kHz
				–55°C		1.5		
				125°C		0.7		
B_1	Unity-gain bandwidth	V_I = 10 mV, See Figure 100	C_L = 20 pF,	25°C		110		kHz
				–55°C		165		
				125°C		70		
ϕ_m	Phase margin	V_I = 10 mV, C_L = 20 pF,	f = B_1, See Figure 100	25°C		38°		
				–55°C		43°		
				125°C		29°		

www.BDTIC.com/TI

TYPICAL CHARACTERISTICS (LOW-BIAS MODE)

Table of Graphs

			FIGURE
V_{IO}	Input offset voltage	Distribution	66, 67
α_{VIO}	Temperature coefficient	Distribution	68, 69
V_{OH}	High-level output voltage	vs High-level output current vs Supply voltage vs Free-air temperature	70, 71 72 73
V_{OL}	Low-level output voltage	vs Common-mode input voltage vs Differential input voltage vs Free-air temperature vs Low-level output current	74, 75 76 77 78, 79
A_{VD}	Large-signal differential voltage amplification	vs Supply voltage vs Free-air temperature vs Frequency	80 81 92, 93
I_{IB}	Input bias current	vs Free-air temperature	82
I_{IO}	Input offset current	vs Free-air temperature	82
V_I	Maximum input voltage	vs Supply voltage	83
I_{DD}	Supply current	vs Supply voltage vs Free-air temperature	84 85
SR	Slew rate	vs Supply voltage vs Free-air temperature	86 87
	Bias-select current	vs Supply voltage	88
$V_{O(PP)}$	Maximum peak-to-peak output voltage	vs Frequency	89
B_1	Unity-gain bandwidth	vs Free-air temperature vs Supply voltage	90 91
ϕ_m	Phase margin	vs Supply voltage vs Free-air temperature vs Capacitive load	94 95 96
V_n	Equivalent input noise voltage	vs Frequency	97
	Phase shift	vs Frequency	92, 93

www.BDTIC.com/TI

TYPICAL CHARACTERISTICS (LOW-BIAS MODE)†

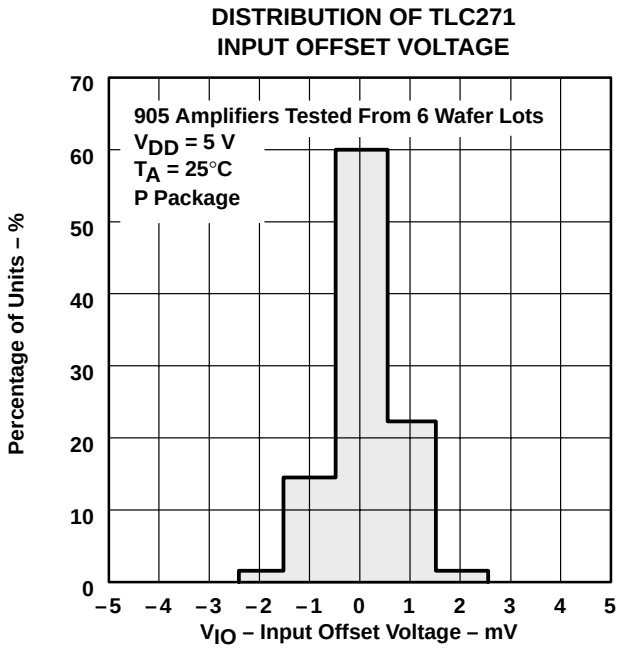

Figure 66

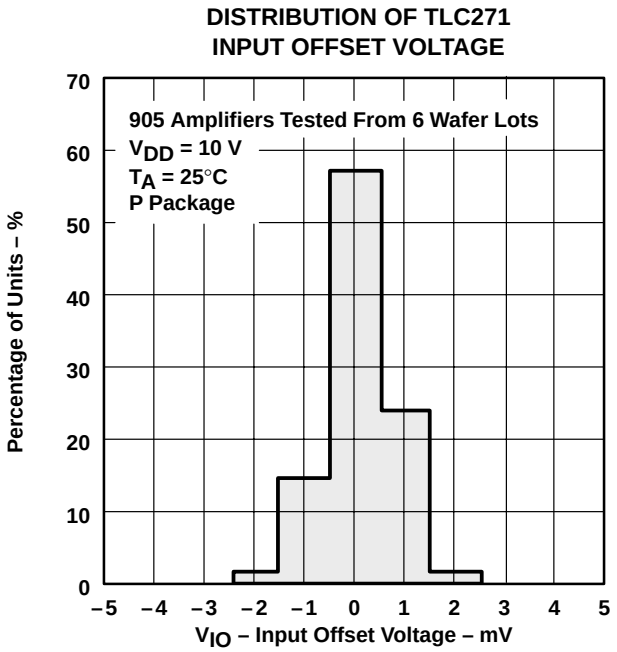

Figure 67

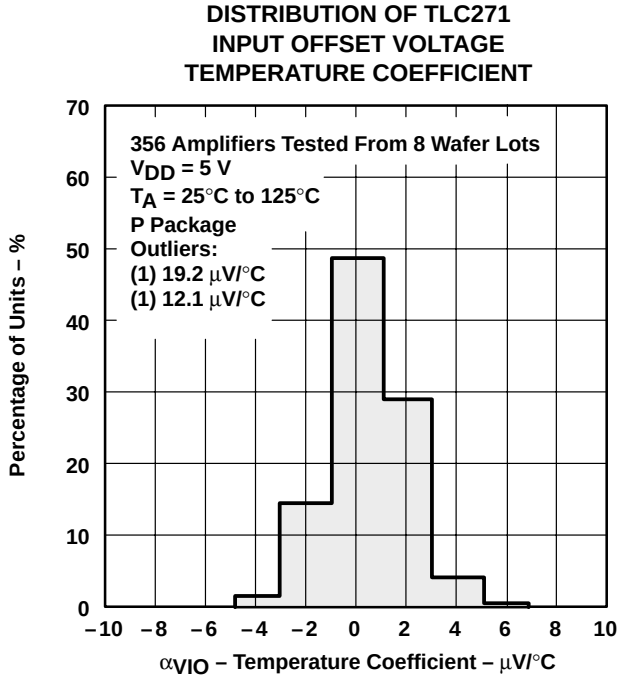

Figure 68

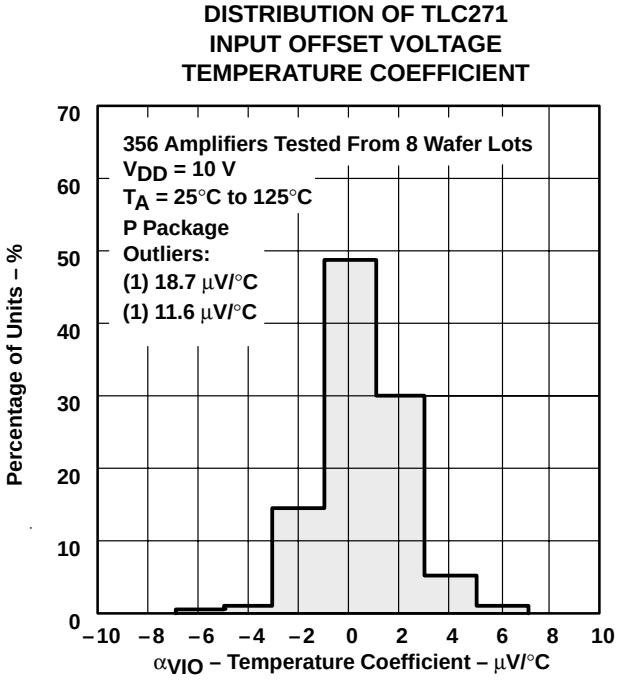

Figure 69

† Data at high and low temperatures are applicable only within the rated operating free-air temperature ranges of the various devices.

www.BDTIC.com/TI

TYPICAL CHARACTERISTICS (LOW-BIAS MODE)†

HIGH-LEVEL OUTPUT VOLTAGE vs HIGH-LEVEL OUTPUT CURRENT

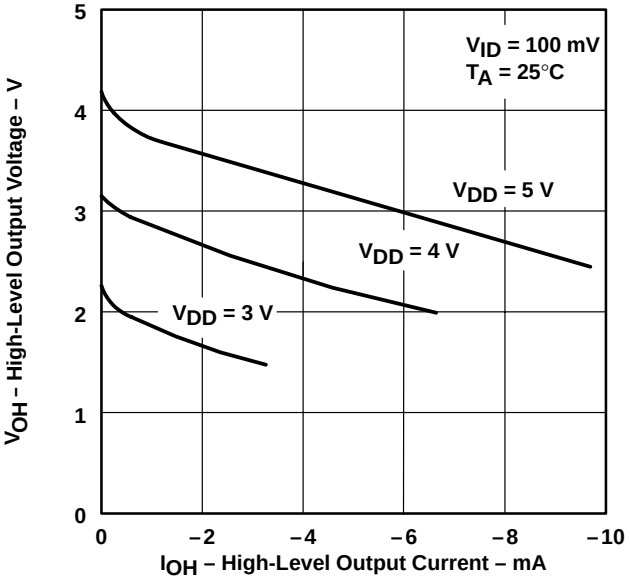

Figure 70

HIGH-LEVEL OUTPUT VOLTAGE vs HIGH-LEVEL OUTPUT CURRENT

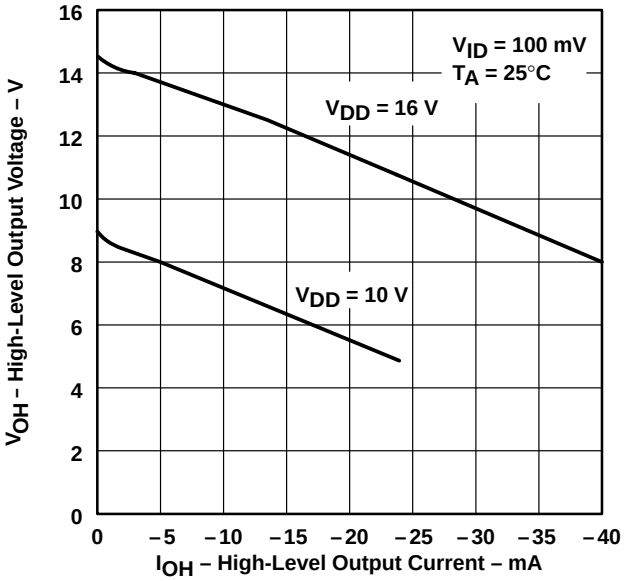

Figure 71

HIGH-LEVEL OUTPUT VOLTAGE vs SUPPLY VOLTAGE

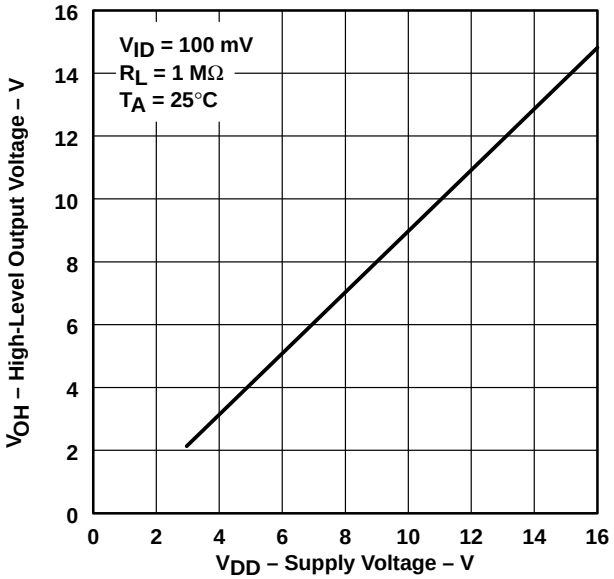

Figure 72

HIGH-LEVEL OUTPUT VOLTAGE vs FREE-AIR TEMPERATURE

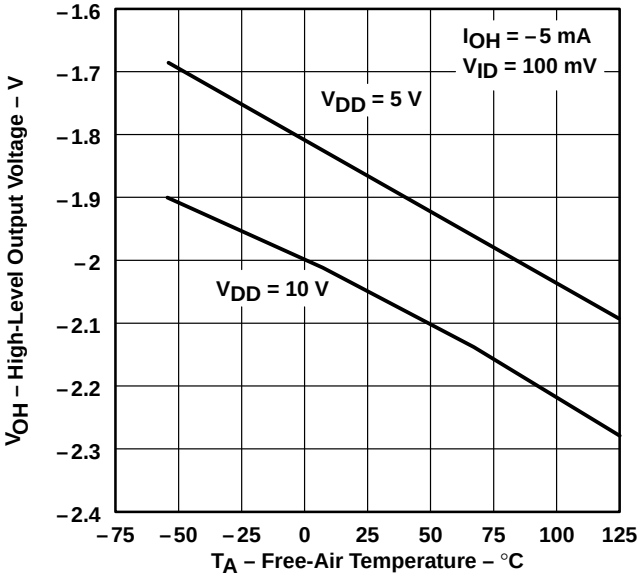

Figure 73

† Data at high and low temperatures are applicable only within the rated operating free-air temperature ranges of the various devices.

www.BDTIC.com/TI

TYPICAL CHARACTERISTICS (LOW-BIAS MODE)†

LOW-LEVEL OUTPUT VOLTAGE vs COMMON-MODE INPUT VOLTAGE

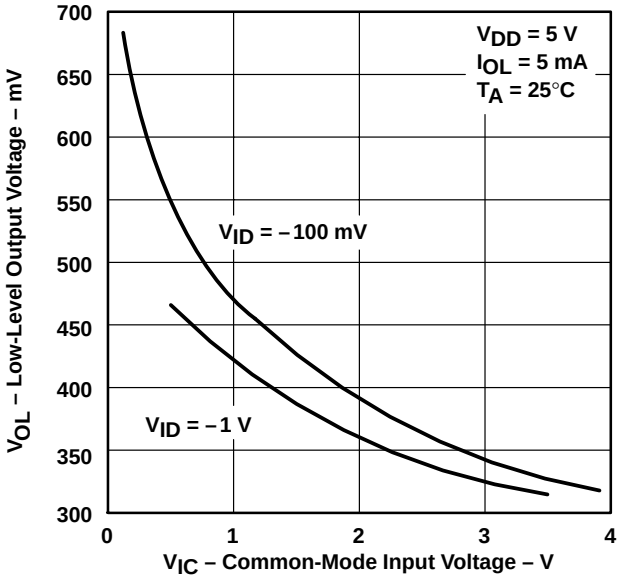

Figure 74

LOW-LEVEL OUTPUT VOLTAGE vs COMMON-MODE INPUT VOLTAGE

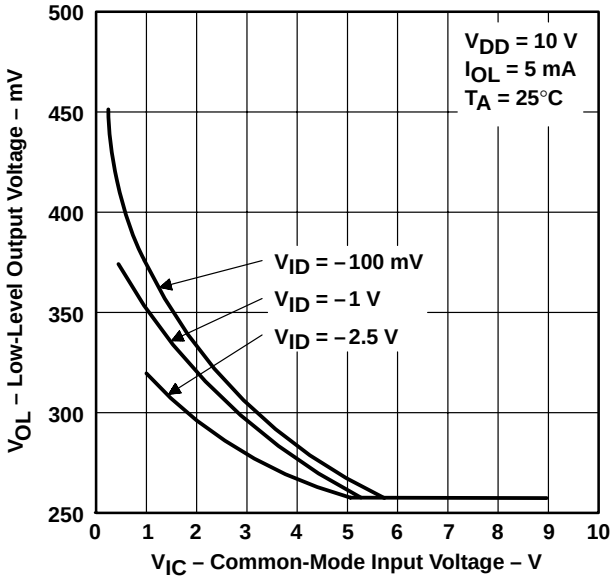

Figure 75

LOW-LEVEL OUTPUT VOLTAGE vs DIFFERENTIAL INPUT VOLTAGE

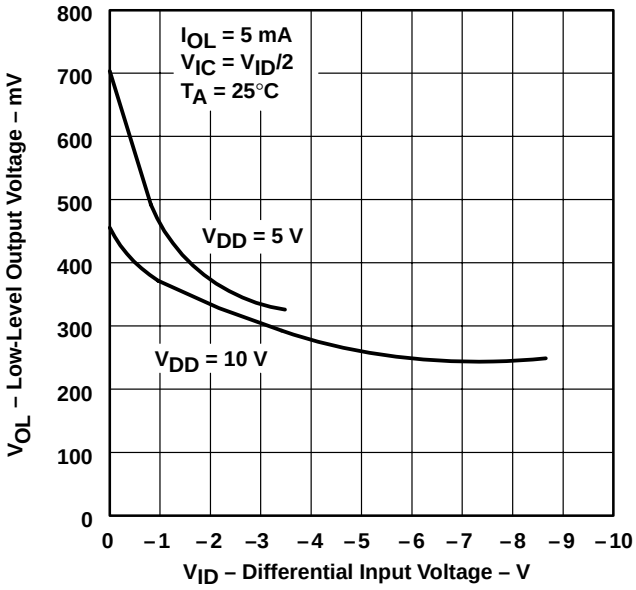

Figure 76

LOW-LEVEL OUTPUT VOLTAGE vs FREE-AIR TEMPERATURE

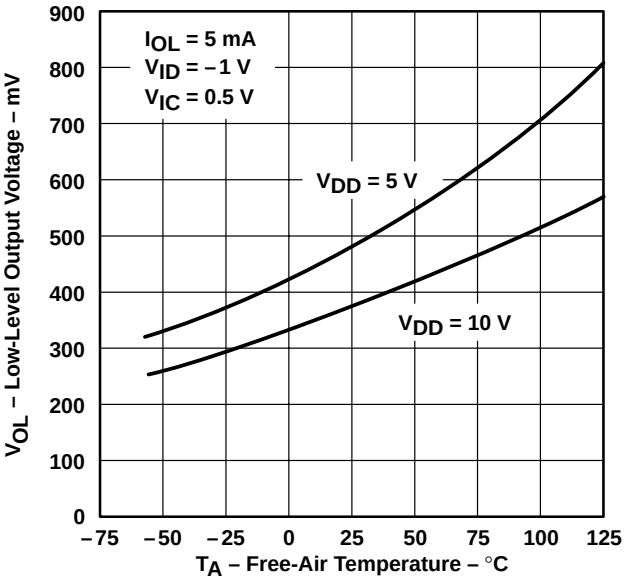

Figure 77

† Data at high and low temperatures are applicable only within the rated operating free-air temperature ranges of the various devices.

www.BDTIC.com/TI

TYPICAL CHARACTERISTICS (LOW-BIAS MODE)†

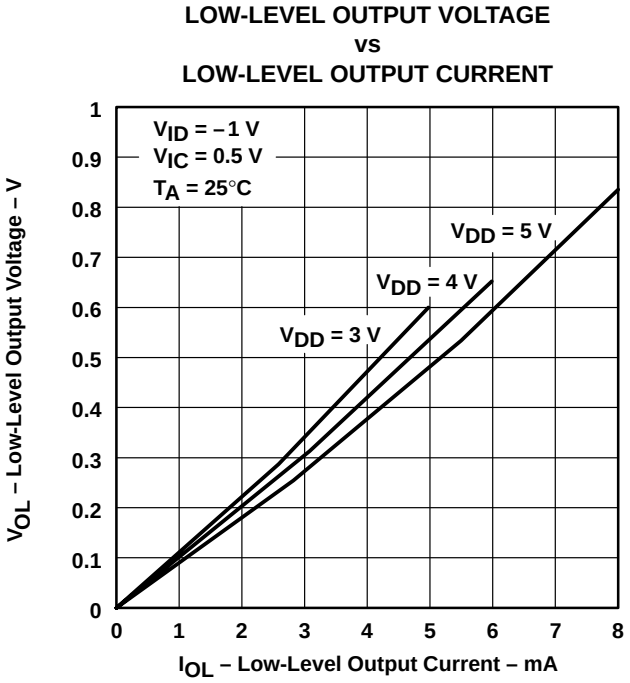

Figure 78

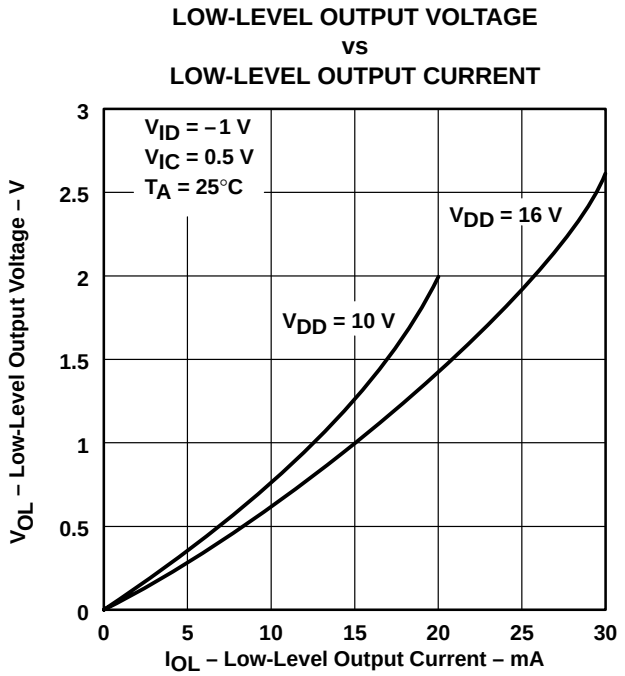

Figure 79

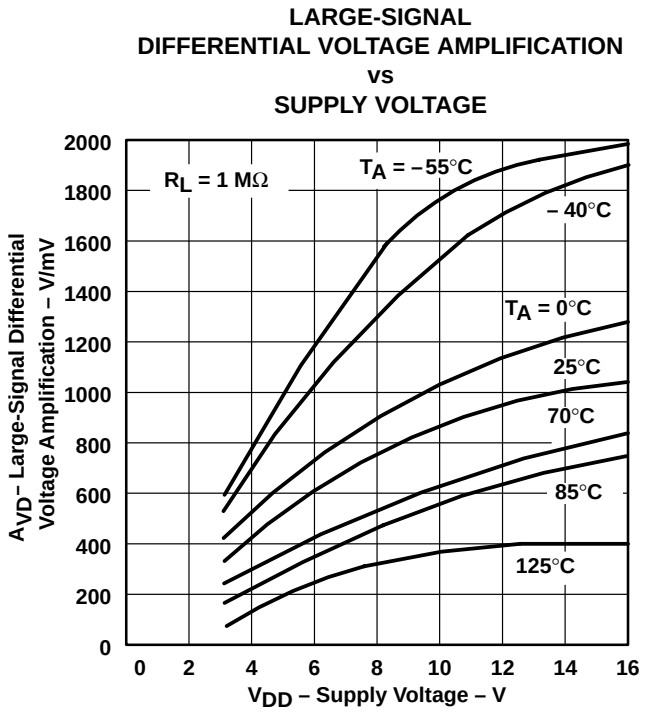

Figure 80

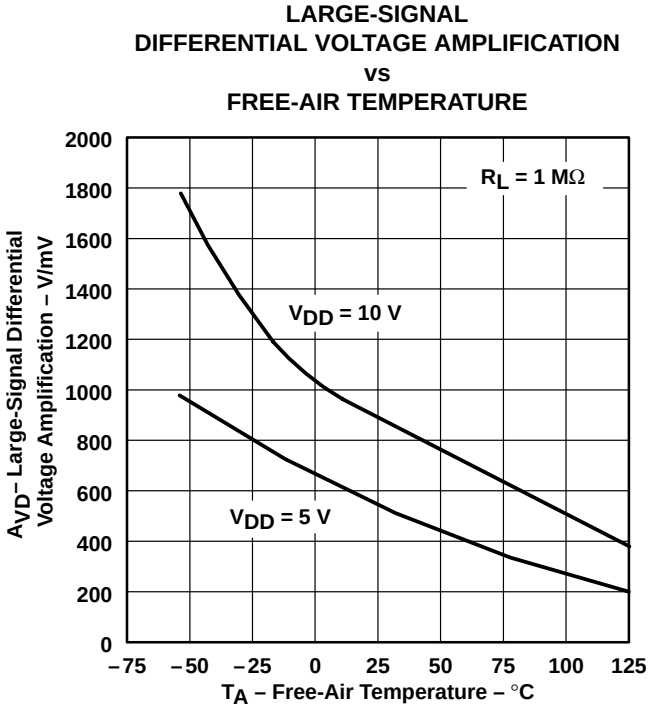

Figure 81

† Data at high and low temperatures are applicable only within the rated operating free-air temperature ranges of the various devices.

www.BDTIC.com/TI

TYPICAL CHARACTERISTICS (LOW-BIAS MODE)†

INPUT BIAS CURRENT AND INPUT OFFSET CURRENT vs FREE-AIR TEMPERATURE

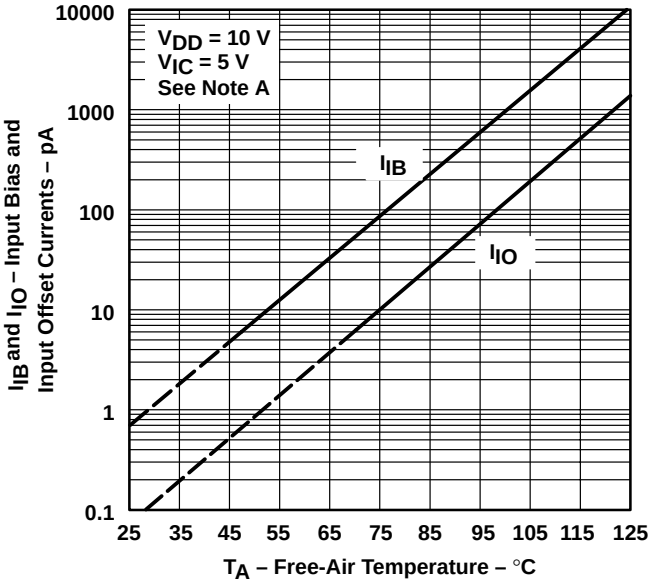

NOTE A: The typical values of input bias current and input offset current below 5 pA were determined mathematically.

Figure 82

MAXIMUM INPUT VOLTAGE vs SUPPLY VOLTAGE

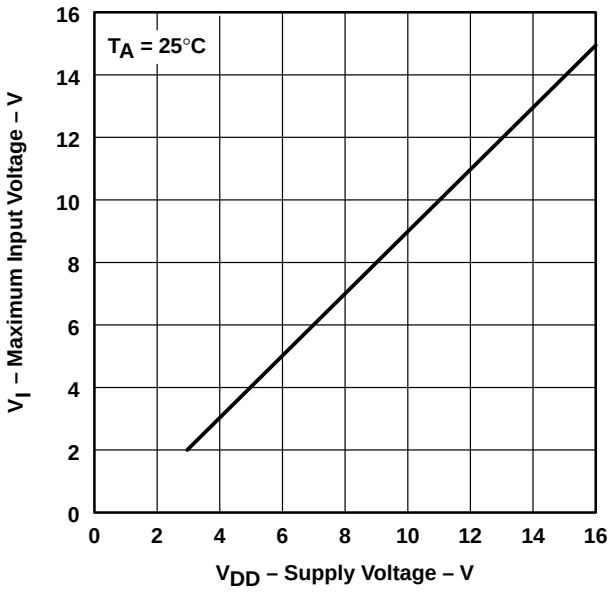

Figure 83

SUPPLY CURRENT vs SUPPLY VOLTAGE

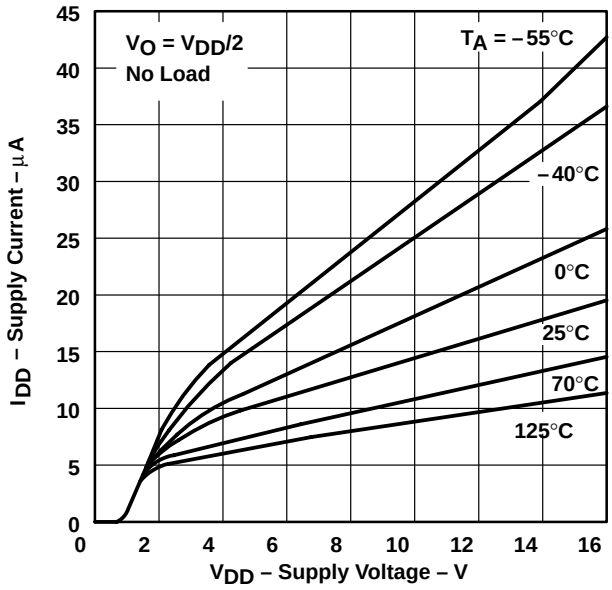

Figure 84

SUPPLY CURRENT vs FREE-AIR TEMPERATURE

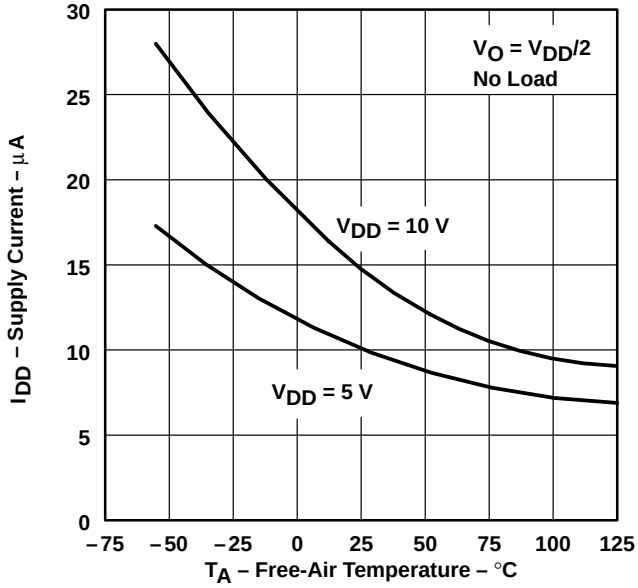

Figure 85

† Data at high and low temperatures are applicable only within the rated operating free-air temperature ranges of the various devices.

www.BDTIC.com/TI

TYPICAL CHARACTERISTICS (LOW-BIAS MODE)†

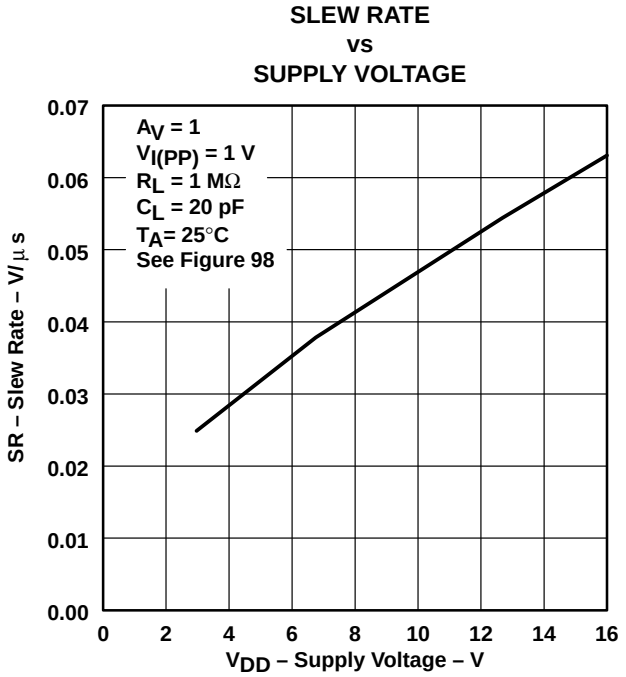

Figure 86

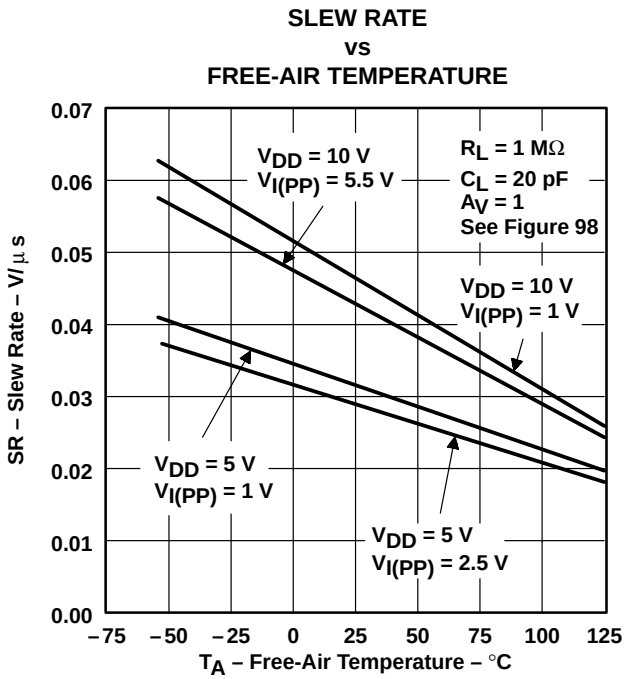

Figure 87

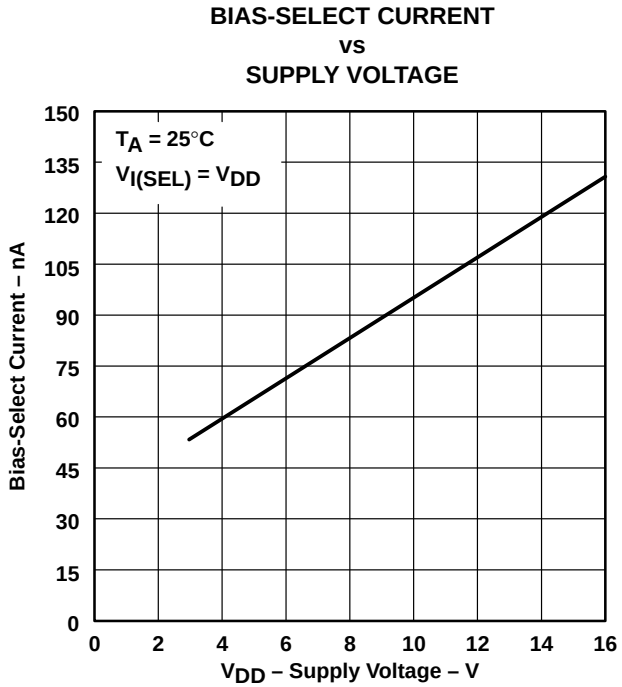

Figure 88

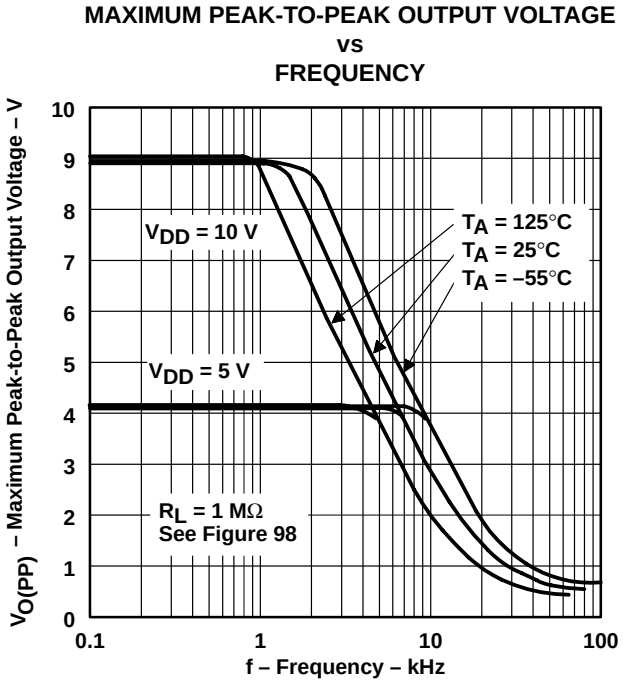

Figure 89

† Data at high and low temperatures are applicable only within the rated operating free-air temperature ranges of the various devices.

www.BDTIC.com/TI

TYPICAL CHARACTERISTICS (LOW-BIAS MODE)†

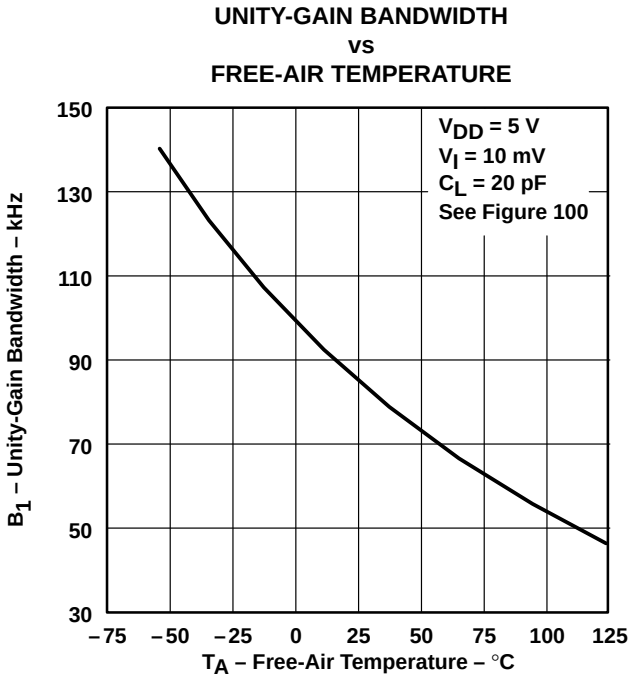

Figure 90

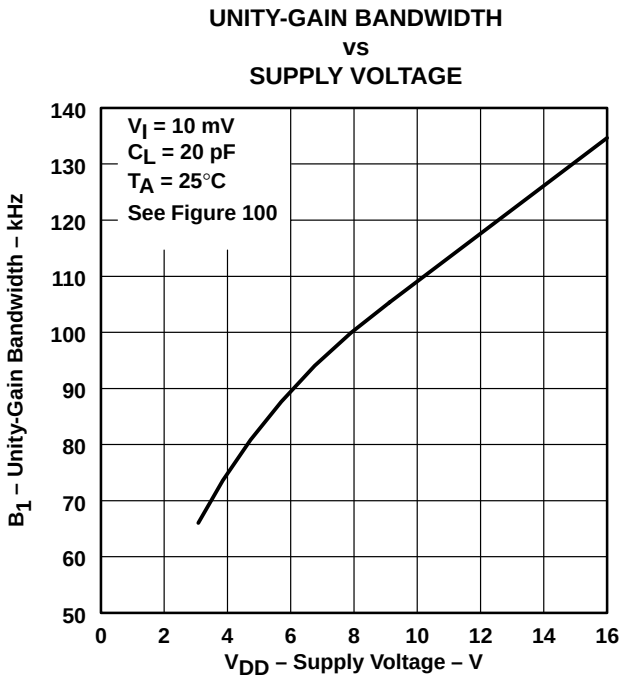

Figure 91

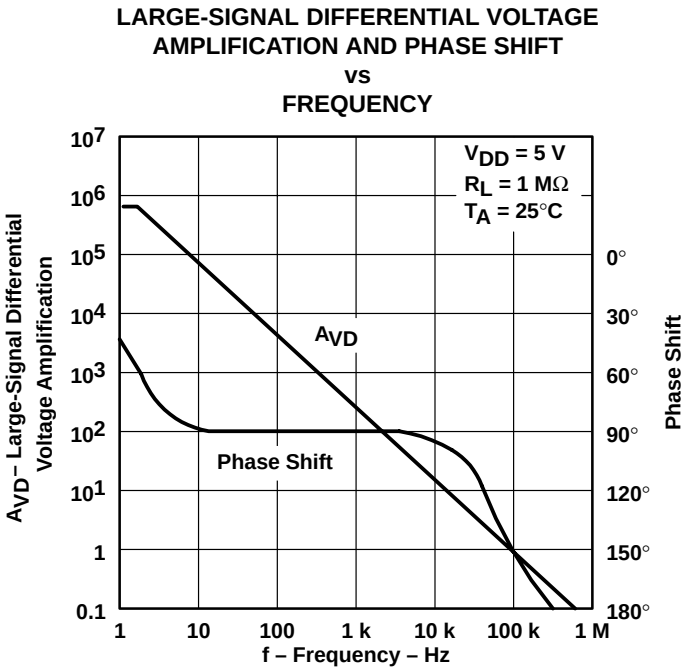

Figure 92

† Data at high and low temperatures are applicable only within the rated operating free-air temperature ranges of the various devices.

www.BDTIC.com/TI

TYPICAL CHARACTERISTICS (LOW-BIAS MODE)†

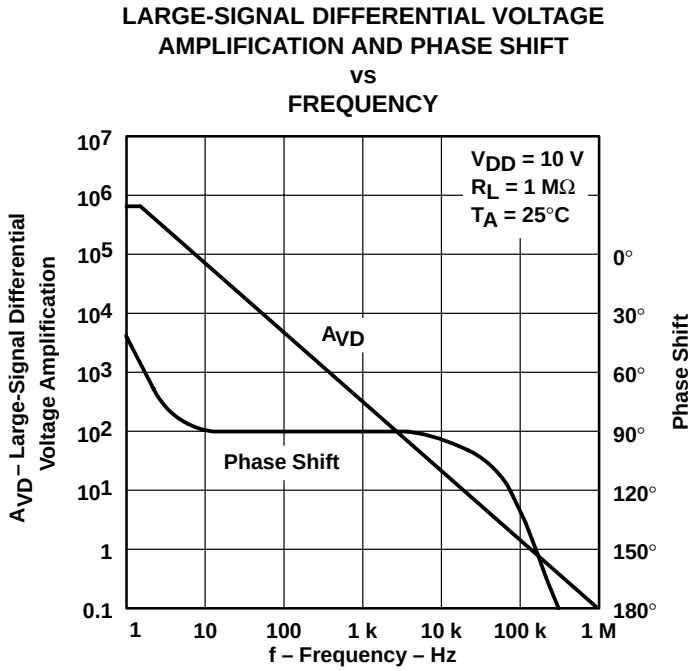

Figure 93

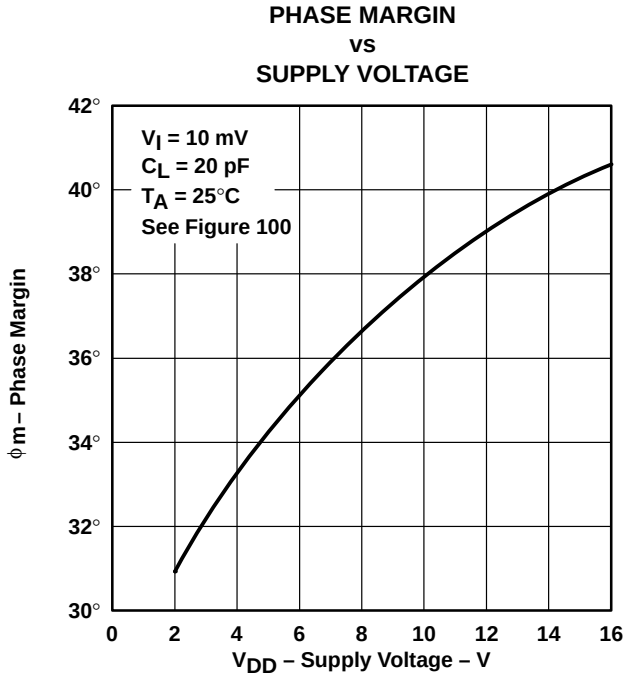

Figure 94

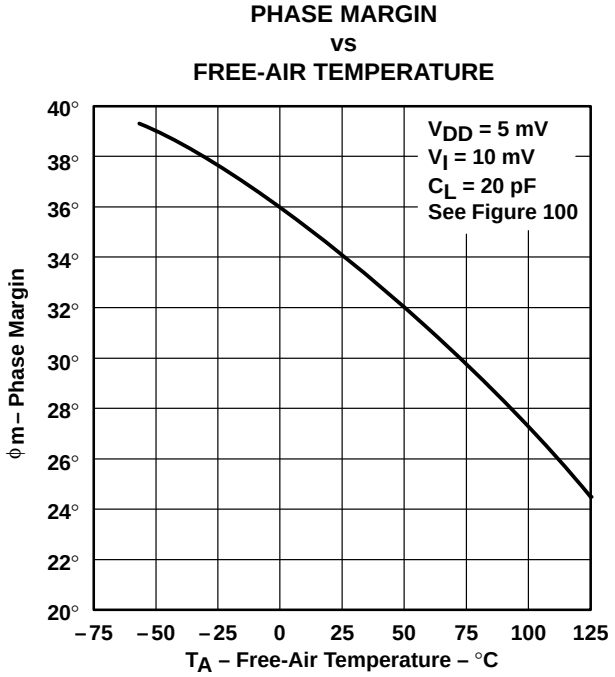

Figure 95

† Data at high and low temperatures are applicable only within the rated operating free-air temperature ranges of the various devices.

www.BDTIC.com/TI

TYPICAL CHARACTERISTICS (LOW-BIAS MODE)†

PHASE MARGIN vs CAPACITIVE LOAD

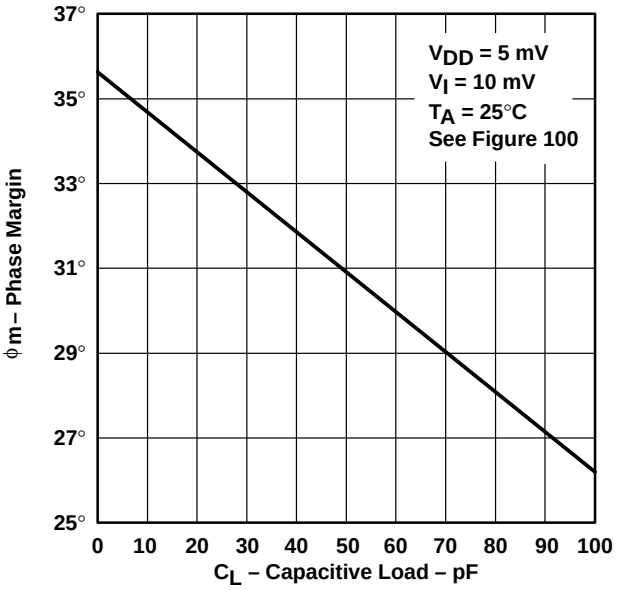

Figure 96

EQUIVALENT INPUT NOISE VOLTAGE vs FREQUENCY

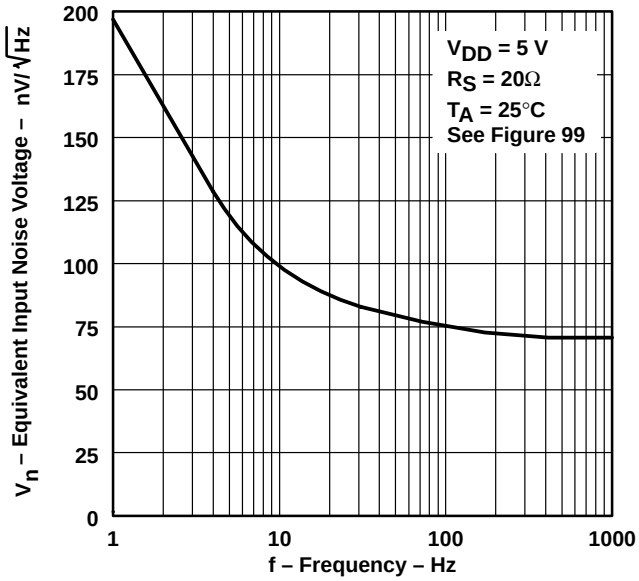

Figure 97

† Data at high and low temperatures are applicable only within the rated operating free-air temperature ranges of the various devices.

www.BDTIC.com/TI

PARAMETER MEASUREMENT INFORMATION

single-supply versus split-supply test circuits

Because the TLC271 is optimized for single-supply operation, circuit configurations used for the various tests often present some inconvenience since the input signal, in many cases, must be offset from ground. This inconvenience can be avoided by testing the device with split supplies and the output load tied to the negative rail. A comparison of single-supply versus split-supply test circuits is shown below. The use of either circuit gives the same result.

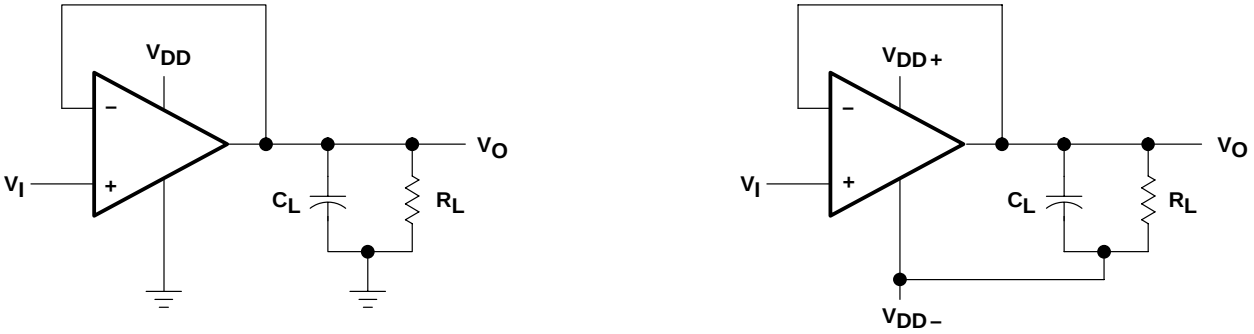

(a) SINGLE SUPPLY (b) SPLIT SUPPLY

Figure 98. Unity-Gain Amplifier

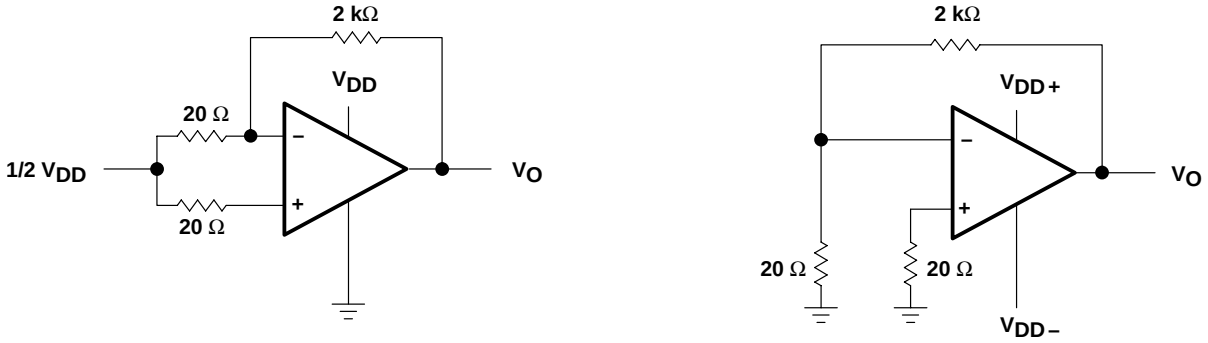

(a) SINGLE SUPPLY (b) SPLIT SUPPLY

Figure 99. Noise-Test Circuit

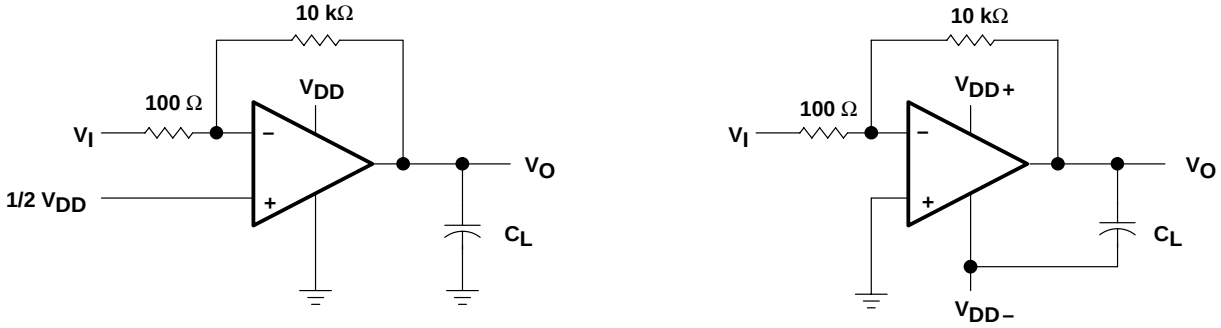

(a) SINGLE SUPPLY (b) SPLIT SUPPLY

Figure 100. Gain-of-100 Inverting Amplifier

www.BDTIC.com/TI

PARAMETER MEASUREMENT INFORMATION

input bias current

Because of the high input impedance of the TLC271 operational amplifiers, attempts to measure the input bias current can result in erroneous readings. The bias current at normal room ambient temperature is typically less than 1 pA, a value that is easily exceeded by leakages on the test socket. Two suggestions are offered to avoid erroneous measurements:

1. Isolate the device from other potential leakage sources. Use a grounded shield around and between the device inputs (see Figure 101). Leakages that would otherwise flow to the inputs are shunted away.
2. Compensate for the leakage of the test socket by actually performing an input bias current test (using a picoammeter) with no device in the test socket. The actual input bias current can then be calculated by subtracting the open-socket leakage readings from the readings obtained with a device in the test socket.

One word of caution: many automatic testers as well as some bench-top operational amplifier testers us the servo-loop technique with a resistor in series with the device input to measure the input bias current (the voltage drop across the series resistor is measured and the bias current is calculated). This method requires that a device be inserted into the test socket to obtain a correct reading; therefore, an open-socket reading is not feasible using this method.

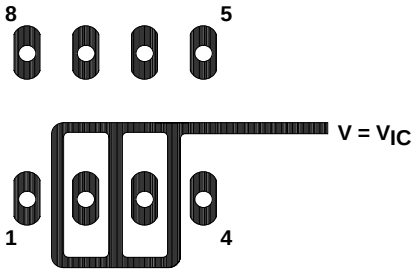

Figure 101. Isolation Metal Around Device inputs (JG and P packages)

low-level output voltage

To obtain low-supply-voltage operation, some compromise is necessary in the input stage. This compromise results in the device low-level output being dependent on both the common-mode input voltage level as well as the differential input voltage level. When attempting to correlate low-level output readings with those quoted in the electrical specifications, these two conditions should be observed. If conditions other than these are to be used, please refer to the Typical Characteristics section of this data sheet.

input offset voltage temperature coefficient

Erroneous readings often result from attempts to measure temperature coefficient of input offset voltage. This parameter is actually a calculation using input offset voltage measurements obtained at two different temperatures. When one (or both) of the temperatures is below freezing, moisture can collect on both the device and the test socket. This moisture results in leakage and contact resistance which can cause erroneous input offset voltage readings. The isolation techniques previously mentioned have no effect on the leakage since the moisture also covers the isolation metal itself, thereby rendering it useless. It is suggested that these measurements be performed at temperatures above freezing to minimize error.

www.BDTIC.com/TI

PARAMETER MEASUREMENT INFORMATION

full-power response

Full-power response, the frequency above which the amplifier slew rate limits the output voltage swing, is often specified two ways: full-linear response and full-peak response. The full-linear response is generally measuredby monitoring the distortion level of the output while increasing the frequency of a sinusoidal input signal until the maximum frequency is found above which the output contains significant distortion. The full-peak response is defined as the maximum output frequency, without regard to distortion, above which full peak-to-peak output swing cannot be maintained.

Because there is no industry-wide accepted value for significant distortion, the full-peak response is specified in this data sheet and is measured using the circuit of Figure 98. The initial setup involves the use of a sinusoidal input to determine the maximum peak-to-peak output of the device (the amplitude of the sinusoidal wave is increased until clipping occurs). The sinusoidal wave is then replaced with a square wave of the same amplitude. The frequency is then increased until the maximum peak-to-peak output can no longer be maintained (Figure 102). A square wave is used to allow a more accurate determination of the point at which the maximum peak-to-peak output is reached.

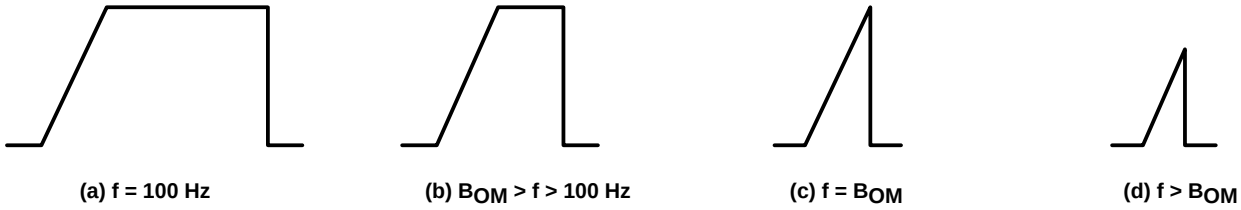

Figure 102. Full-Power-Response Output Signal

test time

Inadequate test time is a frequent problem, especially when testing CMOS devices in a high-volume, short-test-time environment. Internal capacitances are inherently higher in CMOS than in bipolar and BiFET devices, and require longer test times than their bipolar and BiFET counterparts. The problem becomes more pronounced with reduced supply levels and lower temperatures.

APPLICATION INFORMATION

single-supply operation

While the TLC271 performs well using dual power supplies (also called balanced or split supplies), the design is optimized for single-supply operation. This includes an input common mode voltage range that encompasses ground as well as an output voltage range that pulls down to ground. The supply voltage range extends down to 3 V (C-suffix types), thus allowing operation with supply levels commonly available for TTL and HCMOS; however, for maximum dynamic range, 16-V single-supply operation is recommended.

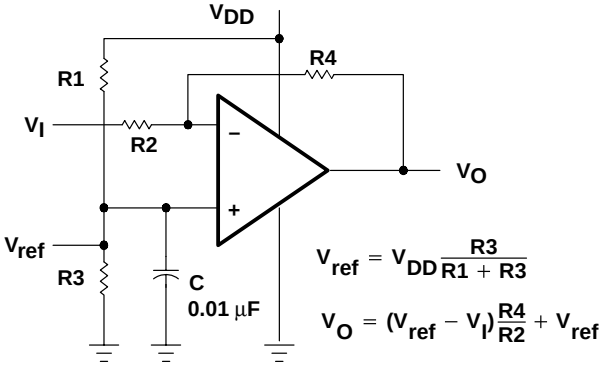

Figure 103. Inverting Amplifier With Voltage Reference

www.BDTIC.com/TI

APPLICATION INFORMATION

single-supply operation (continued)

Many single-supply applications require that a voltage be applied to one input to establish a reference level that is above ground. A resistive voltage divider is usually sufficient to establish this reference level (see Figure 103). The low input bias current consumption of the TLC271 permits the use of very large resistive values to implement the voltage divider, thus minimizing power consumption.

The TLC271 works well in conjunction with digital logic; however, when powering both linear devices and digital logic from the same power supply, the following precautions are recommended:

1. Power the linear devices from separate bypassed supply lines (see Figure 104); otherwise, the linear device supply rails can fluctuate due to voltage drops caused by high switching currents in the digital logic.
2. Use proper bypass techniques to reduce the probability of noise-induced errors. Single capacitive decoupling is often adequate; however, RC decoupling may be necessary in high-frequency applications.

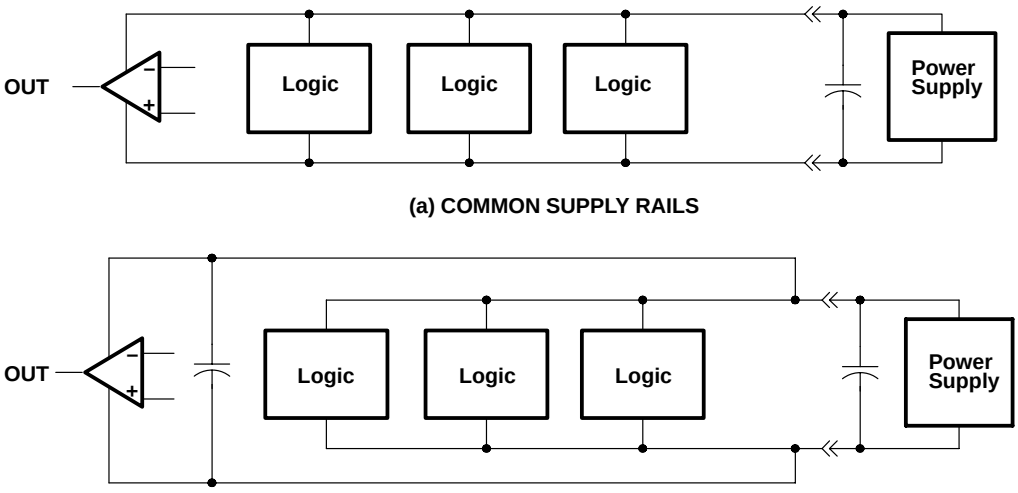

Figure 104. Common Versus Separate Supply Rails

www.BDTIC.com/TI

APPLICATION INFORMATION

input offset voltage nulling

The TLC271 offers external input offset null control. Nulling of the input off set voltage may be achieved by adjusting a 25-kΩ potentiometer connected between the offset null terminals with the wiper Connected as shown in Figure 105. The amount of nulling range varies with the bias selection. In the high-bias mode, the nulling range allows the maximum offset voltage specified to be trimmed to zero. In low-bias and medium-bias modes, total nulling may not be possible.

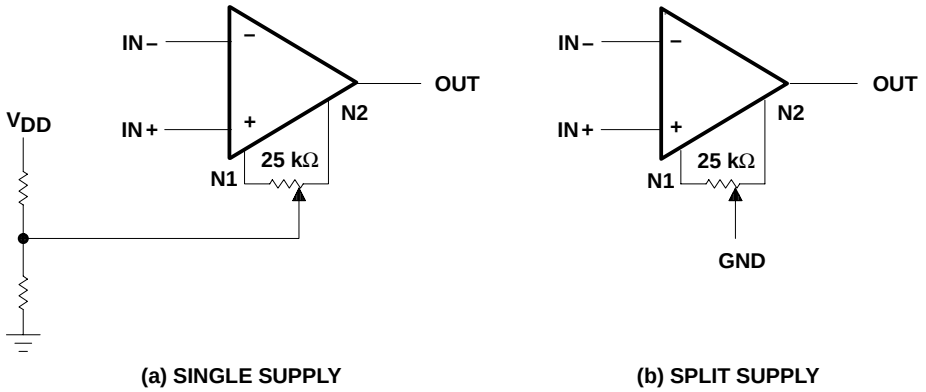

Figure 105. Input Offset Voltage Null Circuit

bias selection

Bias selection is achieved by connecting the bias select pin to one of the three voltage levels (see Figure 106). For medium-bias applications, R is recommended that the bias select pin be connected to the mid-point between the supply rails. This is a simple procedure in split-supply applications, since this point is ground. In single-supply applications, the medium-bias mode necessitates using a voltage divider as indicated. The use of large-value resistors in the voltage divider reduces the current drain of the divider from the supply line. However, large-value resistors used in conjunction with a large-value capacitor requires significant time to charge up to the supply midpoint after the supply is switched on. A voltage other than the midpoint may be used if it is within the voltages specified in the table of Figure 106.

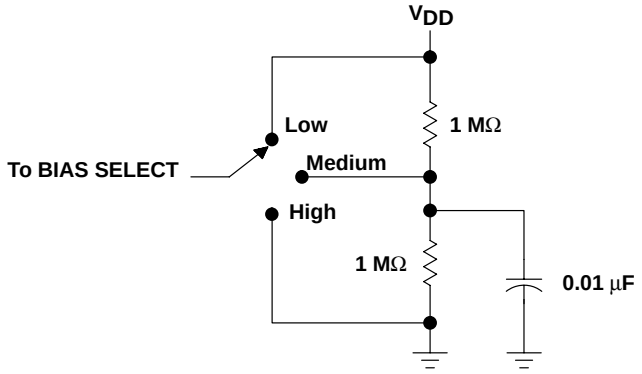

BIAS MODE	BIAS-SELECT VOLTAGE (single supply)
Low	V_{DD}
Medium	1 V to V_{DD} – 1 V
High	GND

Figure 106. Bias Selection for Single-Supply Applications

www.BDTIC.com/TI

APPLICATION INFORMATION

input characteristics

The TLC271 is specified with a minimum and a maximum input voltage that, if exceeded at either input, could cause the device to malfunction. Exceeding this specified range is a common problem, especially in single-supply operation. Note that the lower range limit includes the negative rail, while the upper range limit is specified at V_{DD} – 1 V at T_A = 25°C and at V_{DD} – 1.5 V at all other temperatures.

The use of the polysilicon-gate process and the careful input circuit design gives the TLC271 very good input offset voltage drift characteristics relative to conventional metal-gate processes. Offset voltage drift in CMOS devices is highly influenced by threshold voltage shifts caused by polarization of the phosphorus dopant implanted in the oxide. Placing the phosphorus dopant in a conductor (such as a polysilicon gate) alleviates the polarization problem, thus reducing threshold voltage shifts by more than an order of magnitude. The offset voltage drift with time has been calculated to be typically 0.1 µV/month, including the first month of operation.

Because of the extremely high input impedance and resulting low bias current requirements, the TLC271 is well suited for low-level signal processing; however, leakage currents on printed circuit boards and sockets can easily exceed bias current requirements and cause a degradation in device performance. It is good practice to include guard rings around inputs (similar to those of Figure 101 in the Parameter Measurement Information section). These guards should be driven from a low-impedance source at the same voltage level as the common-mode input (see Figure 107).

The inputs of any unused amplifiers should be tied to ground to avoid possible oscillation.

noise performance

The noise specifications in operational amplifier circuits are greatly dependent on the current in the first-stage differential amplifier. The low input bias current requirements of the TLC271 results in a very low noise current, which is insignificant in most applications. This feature makes the devices especially favorable over bipolar devices when using values of circuit impedance greater than 50 kΩ, since bipolar devices exhibit greater noise currents.

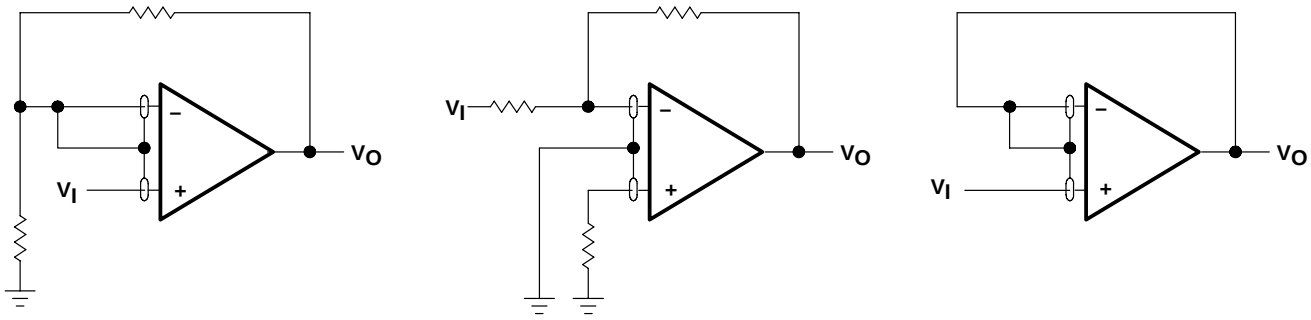

(a) NONINVERTING AMPLIFIER (b) INVERTING AMPLIFIER (c) UNITY-GAIN AMPLIFIER

Figure 107. Guard-Ring Schemes

www.BDTIC.com/TI

APPLICATION INFORMATION

feedback

Operational amplifier circuits almost always employ feedback, and since feedback is the first prerequisite for oscillation, a little caution is appropriate. Most oscillation problems result from driving capacitive loads and ignoring stray input capacitance. A small-value capacitor connected in parallel with the feedback resistor is an effective remedy (see Figure 108). The value of this capacitor is optimized empirically.

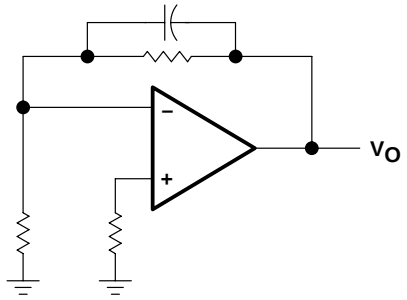

Figure 108. Compensation for Input Capacitance

electrostatic discharge protection

The TLC271 incorporates an internal electrostatic-discharge (ESD) protection circuit that prevents functional failures at voltages up to 2000 V as tested under MIL-STD-883C, Method 3015.2. Care should be exercised, however, when handling these devices as exposure to ESD may result in the degradation of the device parametric performance. The protection circuit also causes the input bias currents to be temperature dependent and have the characteristics of a reverse-biased diode.

latch-up

Because CMOS devices are susceptible to latch-up due to their inherent parasitic thyristors, the TLC271 inputs and output were designed to withstand –100-mA surge currents without sustaining latchup; however, techniques should be used to reduce the chance of latch-up whenever possible. Internal protection diodes should not by design be forward biased. Applied input and output voltage should not exceed the supply voltage by more than 300 mV. Care should be exercised when using capacitive coupling on pulse generators. Supply transients should be shunted by the use of decoupling capacitors (0.1 µF typical) located across the supply rails as close to the device as possible.

The current path established if latch-up occurs is usually between the positive supply rail and ground and can be triggered by surges on the supply lines and/or voltages on either the output or inputs that exceed the supply voltage. Once latch-up occurs, the current flow is limited only by the impedance of the power supply and the forward resistance of the parasitic thyristor and usually results in the destruction of the device. The chance of latch-up occurring increases with increasing temperature and supply voltages.

output characteristics

The output stage of the TLC271 is designed to sink and source relatively high amounts of current (see Typical Characteristics). If the output is subjected to a short-circuit condition, this high current capability can cause device damage under certain conditions. Output current capability increases with supply voltage.

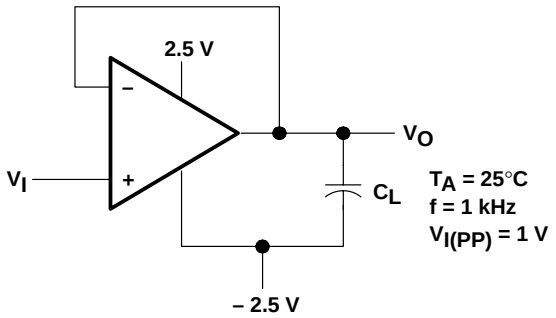

Figure 109. Test Circuit for Output Characteristics

www.BDTIC.com/TI

APPLICATION INFORMATION

output characteristics (continued)

All operating characteristics of the TLC271 were measured using a 20-pF load. The devices drive higher capacitive loads; however, as output load capacitance increases, the resulting response pole occurs at lower frequencies, thereby causing ringing, peaking, or even oscillation (see Figures 110, 111, and 112). In many cases, adding some compensation in the form of a series resistor in the feedback loop alleviates the problem.

(a) C_L = 20 pF, R_L = NO LOAD (b) C_L = 130 pF, R_L = NO LOAD (c) C_L = 150 pF, R_L = NO LOAD

Figure 110. Effect of Capacitive Loads in High-Bias Mode

(a) C_L = 20 pF, R_L = NO LOAD (b) C_L = 170 pF, R_L = NO LOAD (c) C_L = 190 pF, R_L = NO LOAD

Figure 111. Effect of Capacitive Loads in Medium-Bias Mode

(a) C_L = 20 pF, R_L = NO LOAD (b) C_L = 260 pF, R_L = NO LOAD (c) C_L = 310 pF, R_L = NO LOAD

Figure 112. Effect of Capacitive Loads in Low-Bias Mode

www.BDTIC.com/TI

APPLICATION INFORMATION

output characteristics (continued)

Although the TLC271 possesses excellent high-level output voltage and current capability, methods are available for boosting this capability, if needed. The simplest method involves the use of a pullup resistor (R_P) connected from the output to the positive supply rail (see Figure 113). There are two disadvantages to the use of this circuit. First, the NMOS pulldown transistor, N4 (see equivalent schematic) must sink a comparatively large amount of current. In this circuit, N4 behaves like a linear resistor with an on-resistance between approximately 60 Ω and 180 Ω, depending on how hard the operational amplifier input is driven. With very low values of R_P, a voltage offset from 0 V at the output occurs. Secondly, pullup resistor RP acts as a drain load to N4 and the gain of the operational amplifier is reduced at output voltage levels where N5 is not supplying the output current.

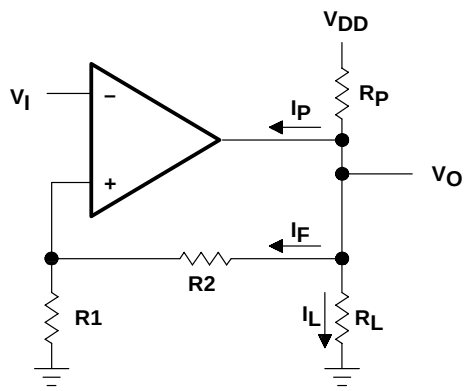

$$R_P = \frac{V_{DD} - V_O}{I_F + I_L + I_P}$$

I_P = Pullup current required by the operational amplifier (typically 500 μA)

Figure 113. Resistive Pullup to Increase V_{OH}

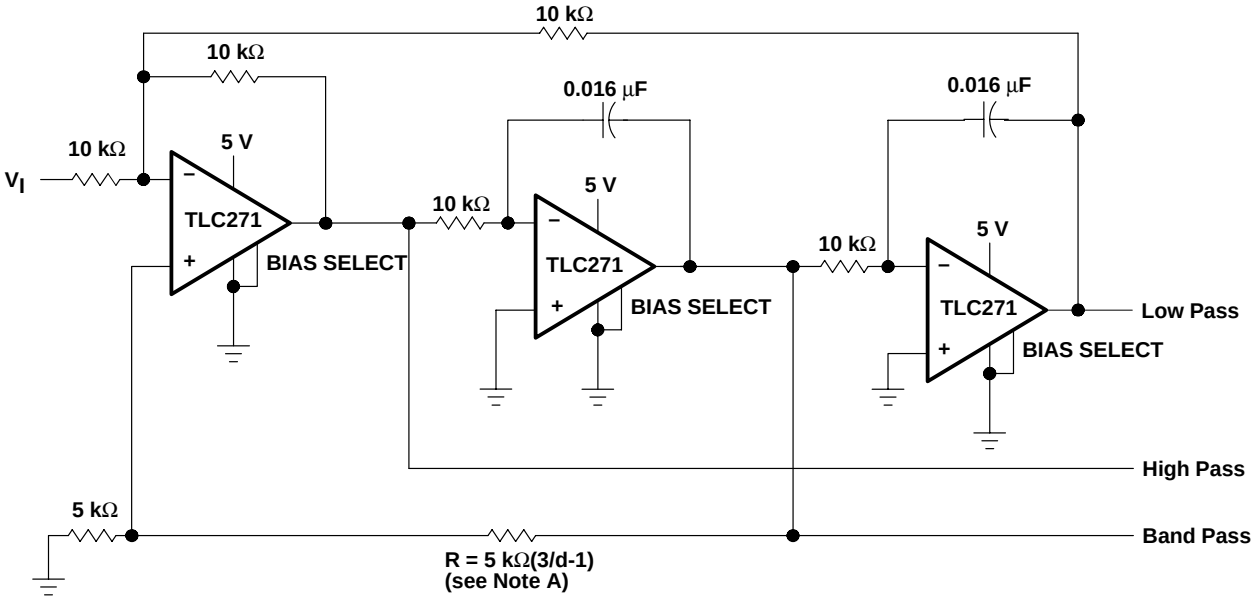

NOTE B: d = damping factor, I/O

Figure 114. State-Variable Filter

TEXAS INSTRUMENTS
POST OFFICE BOX 655303 • DALLAS, TEXAS 75265
www.BDTIC.com/TI

APPLICATION INFORMATION

output characteristics (continued)

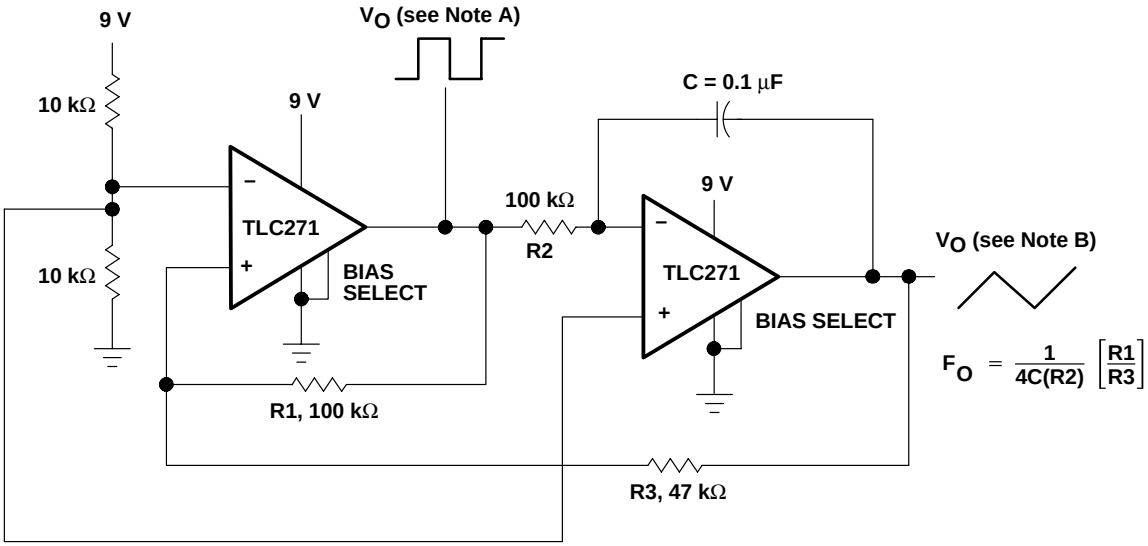

NOTES: A. $V_{O(PP)} = 8$ V
B. $V_{O(PP)} = 4$ V

Figure 115. Single-Supply Function Generator

www.BDTIC.com/TI

APPLICATION INFORMATION (HIGH-BIAS MODE)

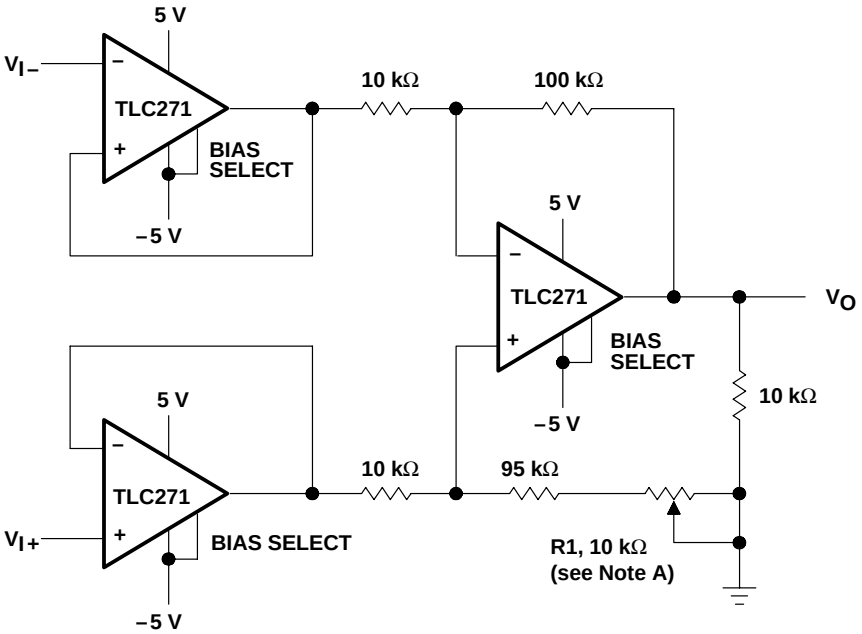

NOTE A: CMRR adjustment must be noninductive.

Figure 116. Low-Power Instrumentation Amplifier

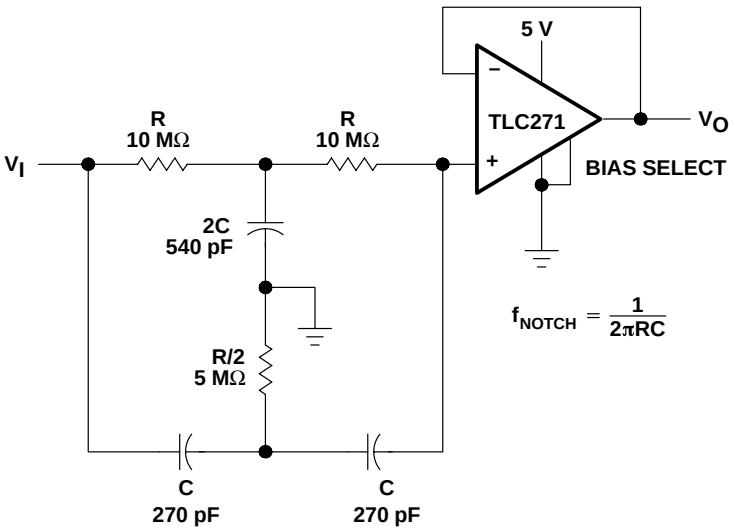

Figure 117. Single-Supply Twin-T Notch Filter

www.BDTIC.com/TI

APPLICATION INFORMATION (HIGH-BIAS MODE)

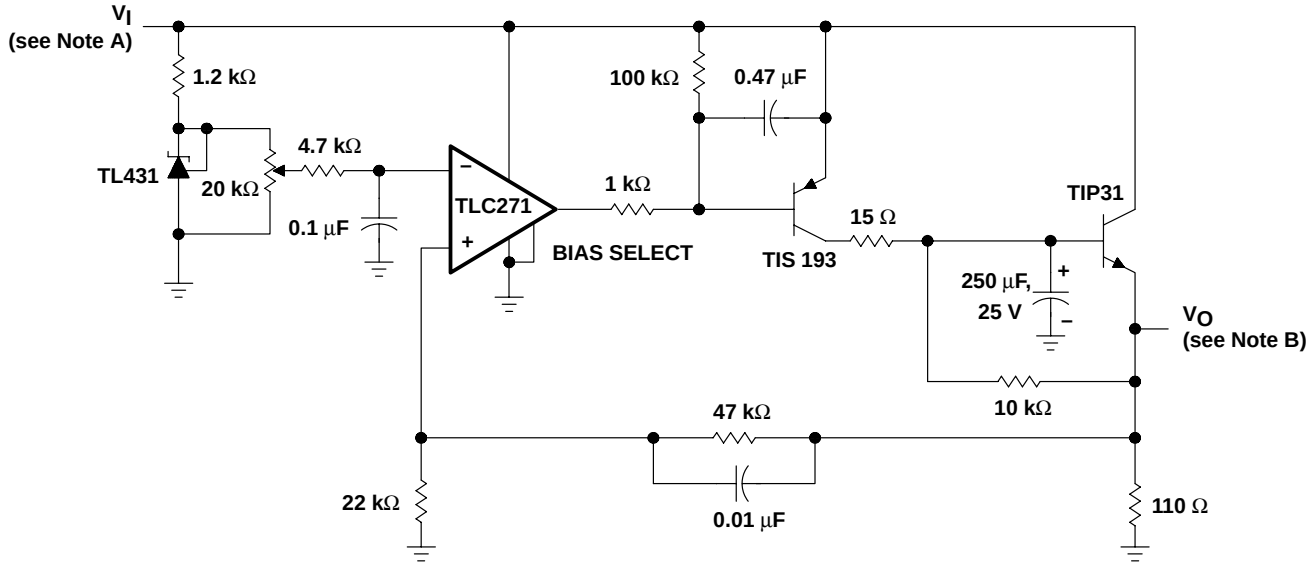

NOTES: A. V_I = 3.5 to 15 V
B. V_O = 2.0 V, 0 to 1 A

Figure 118. Logic-Array Power Supply

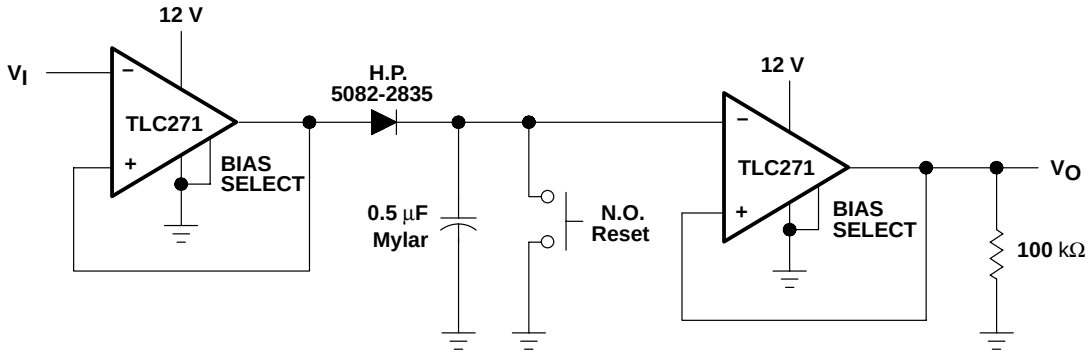

Figure 119. Positive-Peak Detector

www.BDTIC.com/TI

APPLICATION INFORMATION (MEDIUM-BIAS MODE)

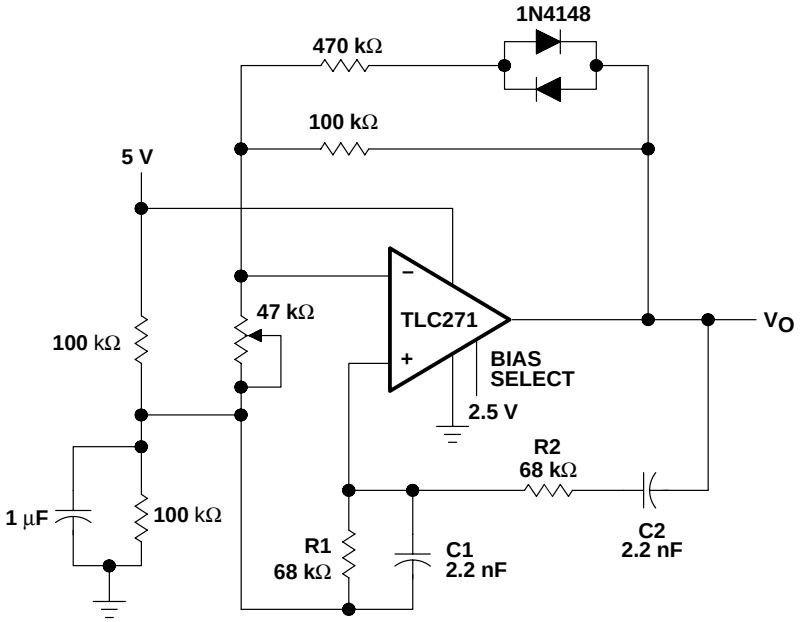

NOTES: A. $V_{O(PP)} = 2$ V

B. $f_0 = \frac{1}{2\pi\sqrt{R1R2C1C2}}$

Figure 120. Wein Oscillator

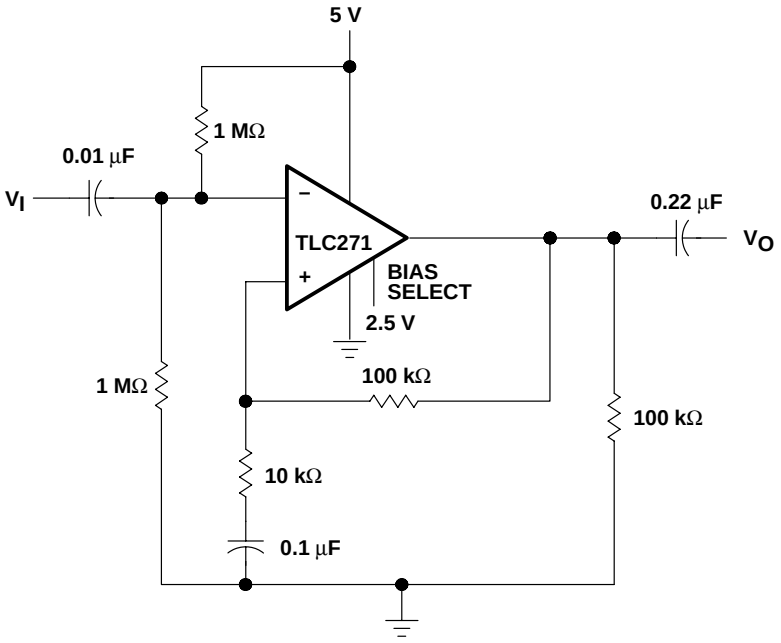

Figure 121. Single-Supply AC Amplifier

www.BDTIC.com/TI

APPLICATION INFORMATION (MEDIUM-BIAS MODE)

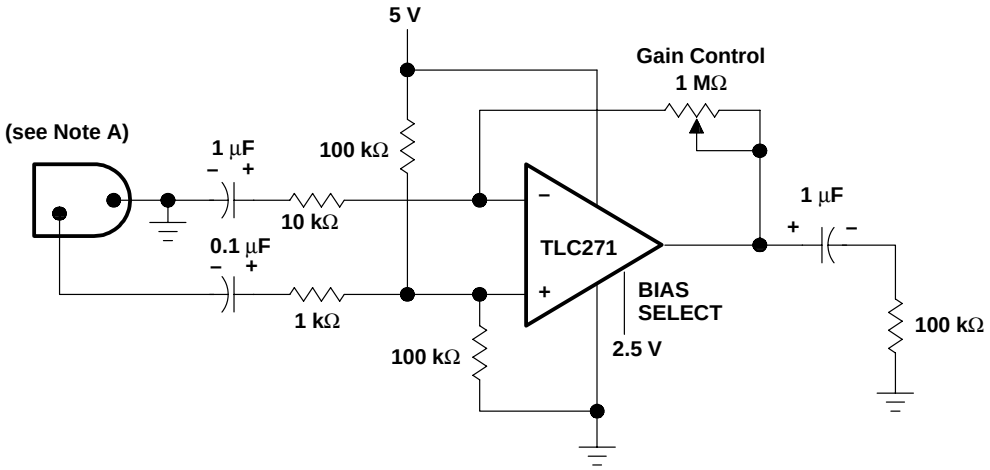

NOTE A: Low to medium impedance dynamic mike

Figure 122. Microphone Preamplifier

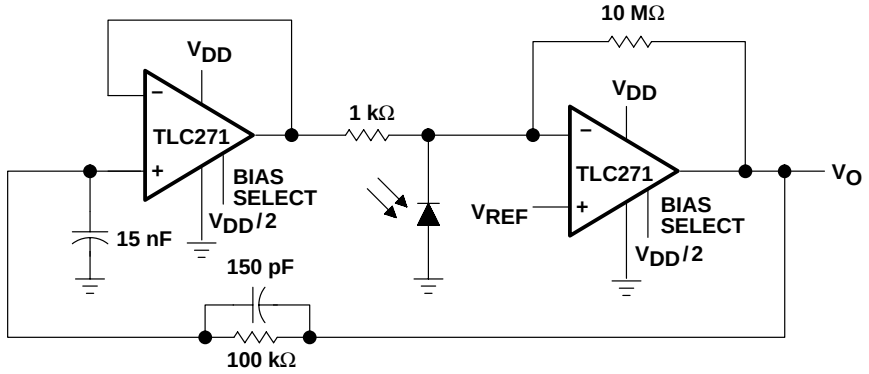

NOTES: A. NOTES: V_{DD} = 4 V to 15 V
B. V_{ref} = 0 V to V_{DD} – 2 V

Figure 123. Photo-Diode Amplifier With Ambient Light Rejection

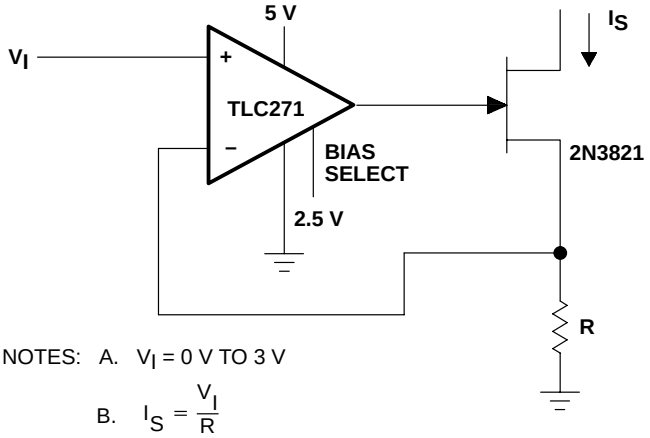

NOTES: A. V_I = 0 V TO 3 V

B. $I_S = \frac{V_I}{R}$

Figure 124. Precision Low-Current Sink

www.BDTIC.com/TI

APPLICATION INFORMATION (LOW-BIAS MODE)

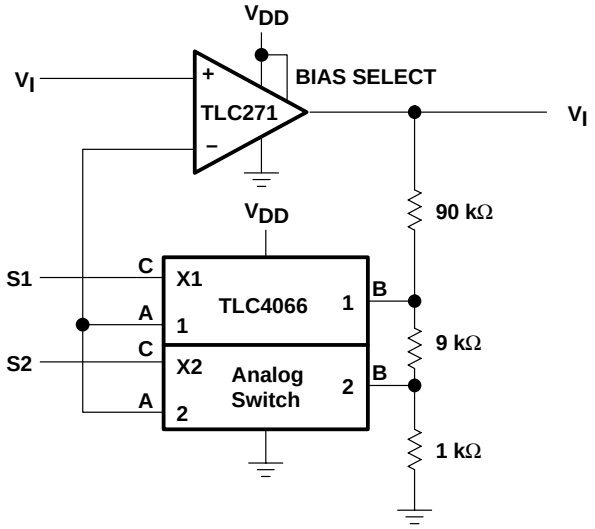

Select	S_1	S_2
A_V	10	100

NOTE A: V_{DD} = 5 V to 12 V

Figure 125. Amplifier With Digital Gain Selection

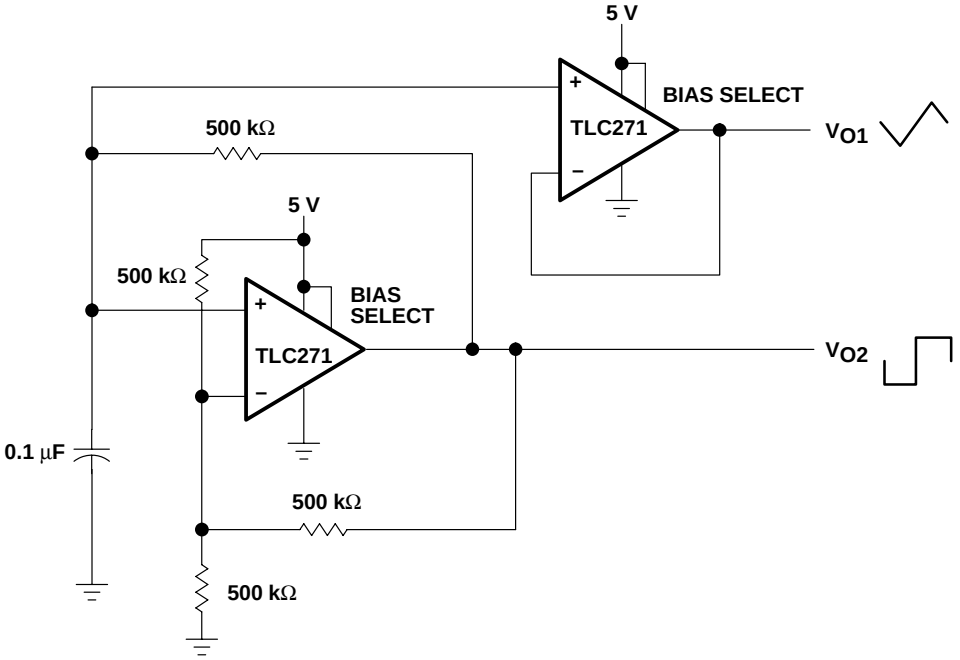

Figure 126. Multivibrator

TEXAS INSTRUMENTS
POST OFFICE BOX 655303 • DALLAS, TEXAS 75265
www.BDTIC.com/TI

APPLICATION INFORMATION (LOW-BIAS MODE)

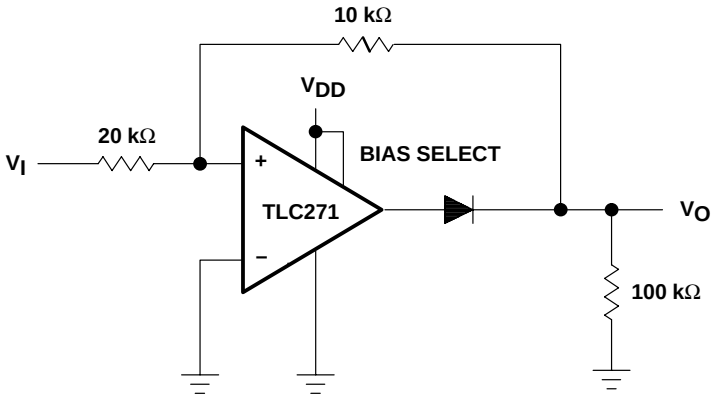

NOTE A: V_{DD} = 5 V to 16 V

Figure 127. Full-Wave Rectifier

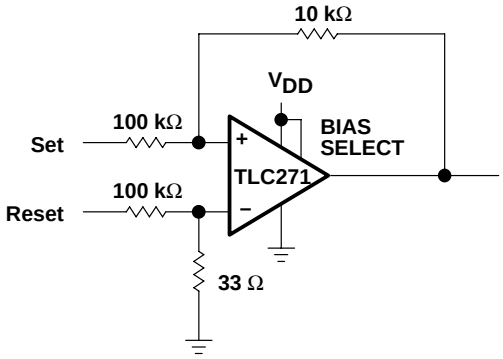

NOTE A: V_{DD} = 5 V to 16 V

Figure 128. Set/Reset Flip-Flop

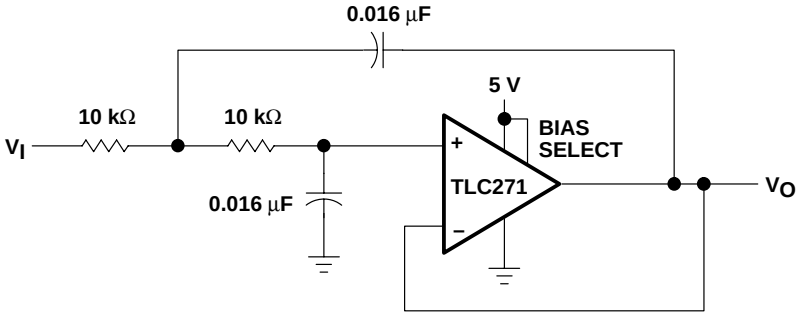

NOTE A: Normalized to F_C = 1 kHz and R_L = 10 kΩ

Figure 129. Two-Pole Low-Pass Butterworth Filter

www.BDTIC.com/TI

PACKAGING INFORMATION

Orderable Device	Status (1)	Package Type	Package Drawing	Pins	Package Qty	Eco Plan (2)	Lead/ Ball Finish	MSL Peak Temp (3)	Samples (Requires Login)
TLC271ACD	ACTIVE	SOIC	D	8	75	Green (RoHS & no Sb/Br)	CU NIPDAU	Level-1-260C-UNLIM	
TLC271ACDG4	ACTIVE	SOIC	D	8	75	Green (RoHS & no Sb/Br)	CU NIPDAU	Level-1-260C-UNLIM	
TLC271ACDR	ACTIVE	SOIC	D	8	2500	Green (RoHS & no Sb/Br)	CU NIPDAU	Level-1-260C-UNLIM	
TLC271ACDRG4	ACTIVE	SOIC	D	8	2500	Green (RoHS & no Sb/Br)	CU NIPDAU	Level-1-260C-UNLIM	
TLC271ACP	ACTIVE	PDIP	P	8	50	Pb-Free (RoHS)	CU NIPDAU	N / A for Pkg Type	
TLC271ACPE4	ACTIVE	PDIP	P	8	50	Pb-Free (RoHS)	CU NIPDAU	N / A for Pkg Type	
TLC271ACPSR	ACTIVE	SO	PS	8	2000	Green (RoHS & no Sb/Br)	CU NIPDAU	Level-1-260C-UNLIM	
TLC271ACPSRG4	ACTIVE	SO	PS	8	2000	Green (RoHS & no Sb/Br)	CU NIPDAU	Level-1-260C-UNLIM	
TLC271AID	ACTIVE	SOIC	D	8	75	Green (RoHS & no Sb/Br)	CU NIPDAU	Level-1-260C-UNLIM	
TLC271AIDG4	ACTIVE	SOIC	D	8	75	Green (RoHS & no Sb/Br)	CU NIPDAU	Level-1-260C-UNLIM	
TLC271AIDR	ACTIVE	SOIC	D	8	2500	Green (RoHS & no Sb/Br)	CU NIPDAU	Level-1-260C-UNLIM	
TLC271AIDRG4	ACTIVE	SOIC	D	8	2500	Green (RoHS & no Sb/Br)	CU NIPDAU	Level-1-260C-UNLIM	
TLC271AIP	ACTIVE	PDIP	P	8	50	Pb-Free (RoHS)	CU NIPDAU	N / A for Pkg Type	
TLC271AIPE4	ACTIVE	PDIP	P	8	50	Pb-Free (RoHS)	CU NIPDAU	N / A for Pkg Type	
TLC271BCD	ACTIVE	SOIC	D	8	75	Green (RoHS & no Sb/Br)	CU NIPDAU	Level-1-260C-UNLIM	
TLC271BCDG4	ACTIVE	SOIC	D	8	75	Green (RoHS & no Sb/Br)	CU NIPDAU	Level-1-260C-UNLIM	
TLC271BCDR	ACTIVE	SOIC	D	8	2500	Green (RoHS & no Sb/Br)	CU NIPDAU	Level-1-260C-UNLIM	
TLC271BCDRG4	ACTIVE	SOIC	D	8	2500	Green (RoHS & no Sb/Br)	CU NIPDAU	Level-1-260C-UNLIM	
TLC271BCP	ACTIVE	PDIP	P	8	50	Pb-Free (RoHS)	CU NIPDAU	N / A for Pkg Type	

www.BDTIC.com/TI

Orderable Device	Status (1)	Package Type	Package Drawing	Pins	Package Qty	Eco Plan (2)	Lead/ Ball Finish	MSL Peak Temp (3)	Samples (Requires Login)
TLC271BCPE4	ACTIVE	PDIP	P	8	50	Pb-Free (RoHS)	CU NIPDAU	N / A for Pkg Type	
TLC271BID	ACTIVE	SOIC	D	8	75	Green (RoHS & no Sb/Br)	CU NIPDAU	Level-1-260C-UNLIM	
TLC271BIDG4	ACTIVE	SOIC	D	8	75	Green (RoHS & no Sb/Br)	CU NIPDAU	Level-1-260C-UNLIM	
TLC271BIDR	ACTIVE	SOIC	D	8	2500	Green (RoHS & no Sb/Br)	CU NIPDAU	Level-1-260C-UNLIM	
TLC271BIDRG4	ACTIVE	SOIC	D	8	2500	Green (RoHS & no Sb/Br)	CU NIPDAU	Level-1-260C-UNLIM	
TLC271BIP	ACTIVE	PDIP	P	8	50	Pb-Free (RoHS)	CU NIPDAU	N / A for Pkg Type	
TLC271BIPE4	ACTIVE	PDIP	P	8	50	Pb-Free (RoHS)	CU NIPDAU	N / A for Pkg Type	
TLC271CD	ACTIVE	SOIC	D	8	75	Green (RoHS & no Sb/Br)	CU NIPDAU	Level-1-260C-UNLIM	
TLC271CDG4	ACTIVE	SOIC	D	8	75	Green (RoHS & no Sb/Br)	CU NIPDAU	Level-1-260C-UNLIM	
TLC271CDR	ACTIVE	SOIC	D	8	2500	Green (RoHS & no Sb/Br)	CU NIPDAU	Level-1-260C-UNLIM	
TLC271CDRG4	ACTIVE	SOIC	D	8	2500	Green (RoHS & no Sb/Br)	CU NIPDAU	Level-1-260C-UNLIM	
TLC271CP	ACTIVE	PDIP	P	8	50	Pb-Free (RoHS)	CU NIPDAU	N / A for Pkg Type	
TLC271CPE4	ACTIVE	PDIP	P	8	50	Pb-Free (RoHS)	CU NIPDAU	N / A for Pkg Type	
TLC271CPSR	ACTIVE	SO	PS	8	2000	Green (RoHS & no Sb/Br)	CU NIPDAU	Level-1-260C-UNLIM	
TLC271CPSRG4	ACTIVE	SO	PS	8	2000	Green (RoHS & no Sb/Br)	CU NIPDAU	Level-1-260C-UNLIM	
TLC271CPW	ACTIVE	TSSOP	PW	8	150	Green (RoHS & no Sb/Br)	CU NIPDAU	Level-1-260C-UNLIM	
TLC271CPWG4	ACTIVE	TSSOP	PW	8	150	Green (RoHS & no Sb/Br)	CU NIPDAU	Level-1-260C-UNLIM	
TLC271CPWLE	OBSOLETE	TSSOP	PW	8		TBD	Call TI	Call TI	
TLC271CPWR	ACTIVE	TSSOP	PW	8	2000	Green (RoHS & no Sb/Br)	CU NIPDAU	Level-1-260C-UNLIM	
TLC271CPWRG4	ACTIVE	TSSOP	PW	8	2000	Green (RoHS & no Sb/Br)	CU NIPDAU	Level-1-260C-UNLIM	

www.BDTIC.com/TI

Orderable Device	Status [1]	Package Type	Package Drawing	Pins	Package Qty	Eco Plan [2]	Lead/ Ball Finish	MSL Peak Temp [3]	Samples (Requires Login)
TLC271ID	ACTIVE	SOIC	D	8	75	Green (RoHS & no Sb/Br)	CU NIPDAU	Level-1-260C-UNLIM	
TLC271IDG4	ACTIVE	SOIC	D	8	75	Green (RoHS & no Sb/Br)	CU NIPDAU	Level-1-260C-UNLIM	
TLC271IDR	ACTIVE	SOIC	D	8	2500	Green (RoHS & no Sb/Br)	CU NIPDAU	Level-1-260C-UNLIM	
TLC271IDRG4	ACTIVE	SOIC	D	8	2500	Green (RoHS & no Sb/Br)	CU NIPDAU	Level-1-260C-UNLIM	
TLC271IP	ACTIVE	PDIP	P	8	50	Pb-Free (RoHS)	CU NIPDAU	N / A for Pkg Type	
TLC271IPE4	ACTIVE	PDIP	P	8	50	Pb-Free (RoHS)	CU NIPDAU	N / A for Pkg Type	
TLC271MDR	ACTIVE	SOIC	D	8	2500	TBD	CU NIPDAU	Level-1-220C-UNLIM	
TLC271MDRG4	ACTIVE	SOIC	D	8	2500	Green (RoHS & no Sb/Br)	CU NIPDAU	Level-1-260C-UNLIM	
TLC271MJG	OBSOLETE	CDIP	JG	8		TBD	Call TI	Call TI	

[1] The marketing status values are defined as follows:
ACTIVE: Product device recommended for new designs.
LIFEBUY: TI has announced that the device will be discontinued, and a lifetime-buy period is in effect.
NRND: Not recommended for new designs. Device is in production to support existing customers, but TI does not recommend using this part in a new design.
PREVIEW: Device has been announced but is not in production. Samples may or may not be available.
OBSOLETE: TI has discontinued the production of the device.

[2] Eco Plan - The planned eco-friendly classification: Pb-Free (RoHS), Pb-Free (RoHS Exempt), or Green (RoHS & no Sb/Br) - please check http://www.ti.com/productcontent for the latest availability information and additional product content details.
TBD: The Pb-Free/Green conversion plan has not been defined.
Pb-Free (RoHS): TI's terms "Lead-Free" or "Pb-Free" mean semiconductor products that are compatible with the current RoHS requirements for all 6 substances, including the requirement that lead not exceed 0.1% by weight in homogeneous materials. Where designed to be soldered at high temperatures, TI Pb-Free products are suitable for use in specified lead-free processes.
Pb-Free (RoHS Exempt): This component has a RoHS exemption for either 1) lead-based flip-chip solder bumps used between the die and package, or 2) lead-based die adhesive used between the die and leadframe. The component is otherwise considered Pb-Free (RoHS compatible) as defined above.
Green (RoHS & no Sb/Br): TI defines "Green" to mean Pb-Free (RoHS compatible), and free of Bromine (Br) and Antimony (Sb) based flame retardants (Br or Sb do not exceed 0.1% by weight in homogeneous material)

[3] MSL, Peak Temp. -- The Moisture Sensitivity Level rating according to the JEDEC industry standard classifications, and peak solder temperature.

Important Information and Disclaimer: The information provided on this page represents TI's knowledge and belief as of the date that it is provided. TI bases its knowledge and belief on information provided by third parties, and makes no representation or warranty as to the accuracy of such information. Efforts are underway to better integrate information from third parties. TI has taken and continues to take reasonable steps to provide representative and accurate information but may not have conducted destructive testing or chemical analysis on incoming materials and chemicals. TI and TI suppliers consider certain information to be proprietary, and thus CAS numbers and other limited information may not be available for release.

www.BDTIC.com/TI

In no event shall TI's liability arising out of such information exceed the total purchase price of the TI part(s) at issue in this document sold by TI to Customer on an annual basis.

www.BDTIC.com/TI

TAPE AND REEL INFORMATION

REEL DIMENSIONS

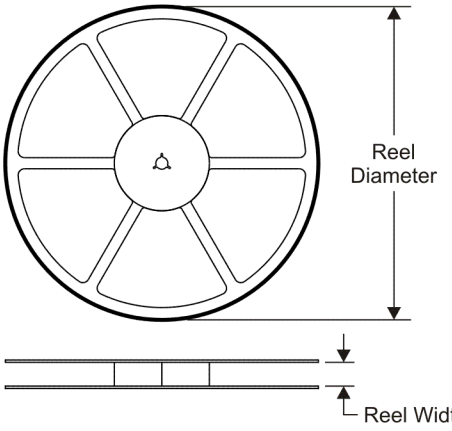

TAPE DIMENSIONS

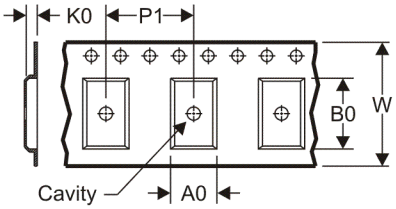

A0	Dimension designed to accommodate the component width
B0	Dimension designed to accommodate the component length
K0	Dimension designed to accommodate the component thickness
W	Overall width of the carrier tape
P1	Pitch between successive cavity centers

QUADRANT ASSIGNMENTS FOR PIN 1 ORIENTATION IN TAPE

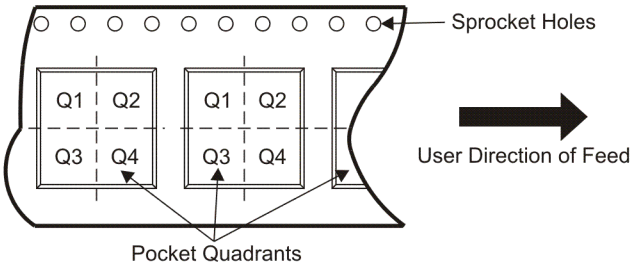

*All dimensions are nominal

Device	Package Type	Package Drawing	Pins	SPQ	Reel Diameter (mm)	Reel Width W1 (mm)	A0 (mm)	B0 (mm)	K0 (mm)	P1 (mm)	W (mm)	Pin1 Quadrant
TLC271ACDR	SOIC	D	8	2500	330.0	12.4	6.4	5.2	2.1	8.0	12.0	Q1
TLC271ACPSR	SO	PS	8	2000	330.0	16.4	8.2	6.6	2.5	12.0	16.0	Q1
TLC271AIDR	SOIC	D	8	2500	330.0	12.4	6.4	5.2	2.1	8.0	12.0	Q1
TLC271BCDR	SOIC	D	8	2500	330.0	12.4	6.4	5.2	2.1	8.0	12.0	Q1
TLC271BIDR	SOIC	D	8	2500	330.0	12.4	6.4	5.2	2.1	8.0	12.0	Q1
TLC271CDR	SOIC	D	8	2500	330.0	12.4	6.4	5.2	2.1	8.0	12.0	Q1
TLC271CPSR	SO	PS	8	2000	330.0	16.4	8.2	6.6	2.5	12.0	16.0	Q1
TLC271CPWR	TSSOP	PW	8	2000	330.0	12.4	7.0	3.6	1.6	8.0	12.0	Q1
TLC271IDR	SOIC	D	8	2500	330.0	12.4	6.4	5.2	2.1	8.0	12.0	Q1
TLC271MDR	SOIC	D	8	2500	330.0	12.4	6.4	5.2	2.1	8.0	12.0	Q1

www.BDTIC.com/TI

TAPE AND REEL BOX DIMENSIONS

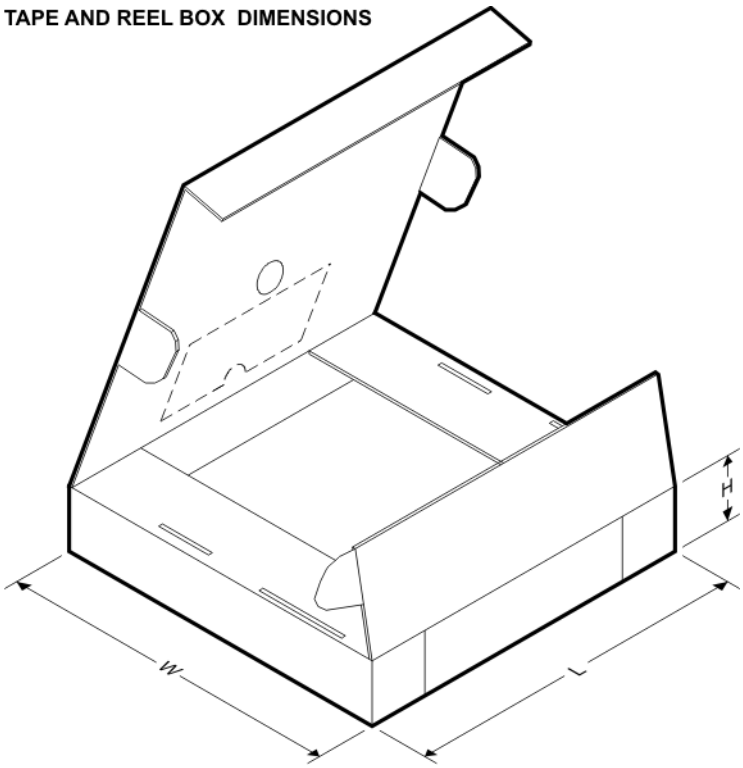

*All dimensions are nominal

Device	Package Type	Package Drawing	Pins	SPQ	Length (mm)	Width (mm)	Height (mm)
TLC271ACDR	SOIC	D	8	2500	340.5	338.1	20.6
TLC271ACPSR	SO	PS	8	2000	346.0	346.0	33.0
TLC271AIDR	SOIC	D	8	2500	340.5	338.1	20.6
TLC271BCDR	SOIC	D	8	2500	340.5	338.1	20.6
TLC271BIDR	SOIC	D	8	2500	340.5	338.1	20.6
TLC271CDR	SOIC	D	8	2500	340.5	338.1	20.6
TLC271CPSR	SO	PS	8	2000	346.0	346.0	33.0
TLC271CPWR	TSSOP	PW	8	2000	346.0	346.0	29.0
TLC271IDR	SOIC	D	8	2500	340.5	338.1	20.6
TLC271MDR	SOIC	D	8	2500	346.0	346.0	29.0

www.BDTIC.com/TI

JG (R-GDIP-T8) **CERAMIC DUAL-IN-LINE**

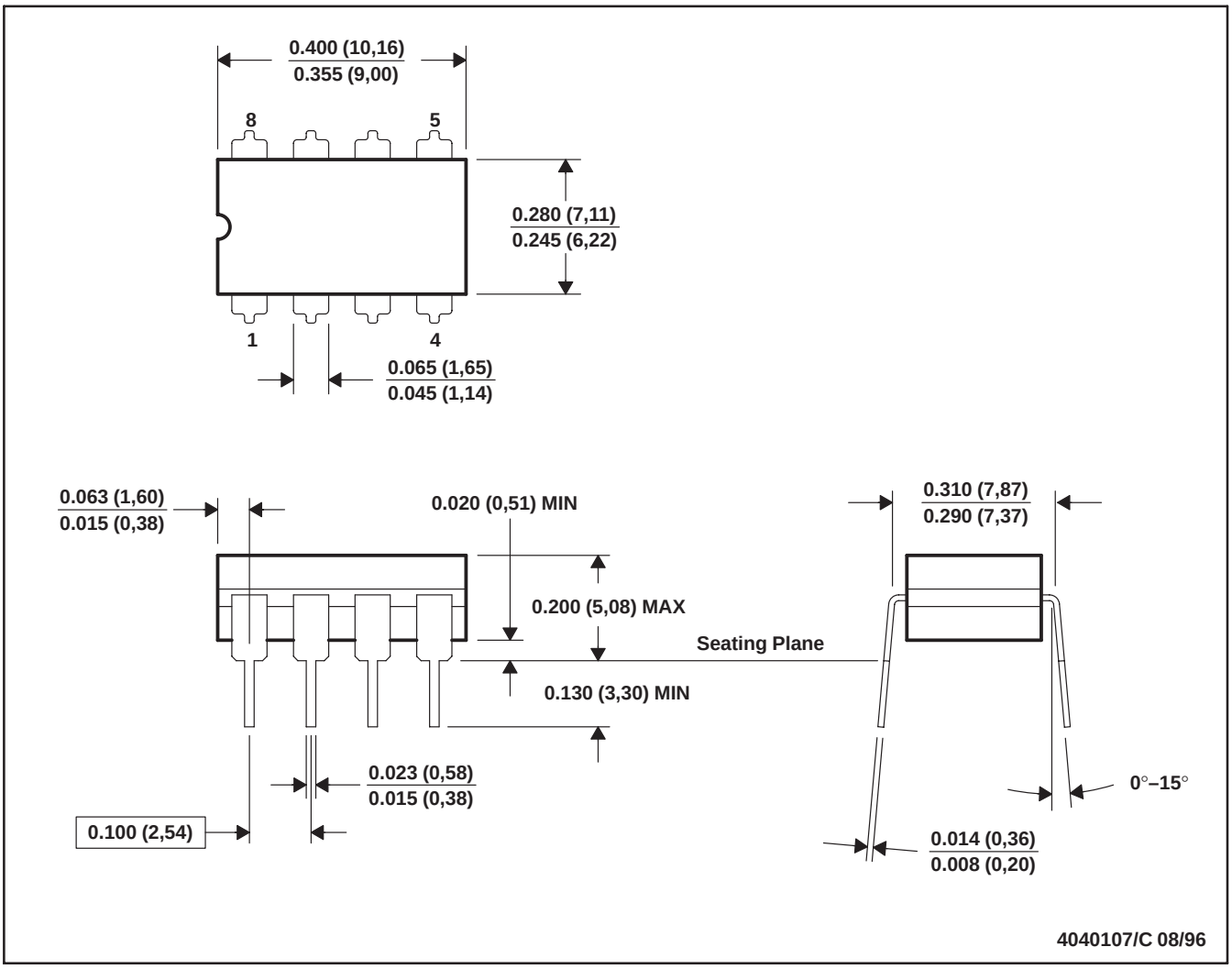

NOTES: A. All linear dimensions are in inches (millimeters).
B. This drawing is subject to change without notice.
C. This package can be hermetically sealed with a ceramic lid using glass frit.
D. Index point is provided on cap for terminal identification.
E. Falls within MIL STD 1835 GDIP1-T8

www.BDTIC.com/TI

P (R–PDIP–T8) PLASTIC DUAL–IN–LINE PACKAGE

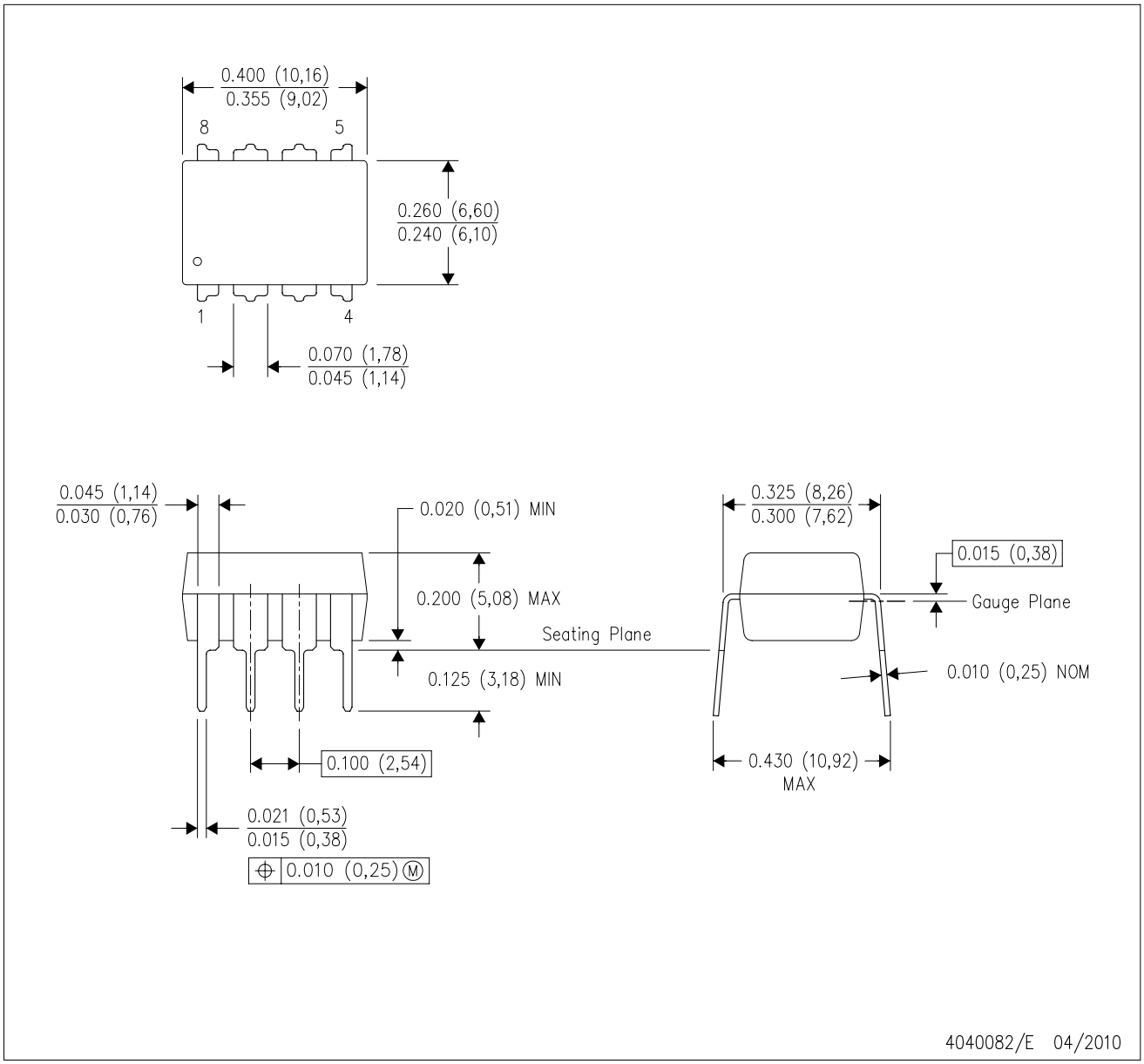

NOTES:
A. All linear dimensions are in inches (millimeters).
B. This drawing is subject to change without notice.
C. Falls within JEDEC MS–001 variation BA.

www.BDTIC.com/TI

D (R–PDSO–G8) PLASTIC SMALL OUTLINE

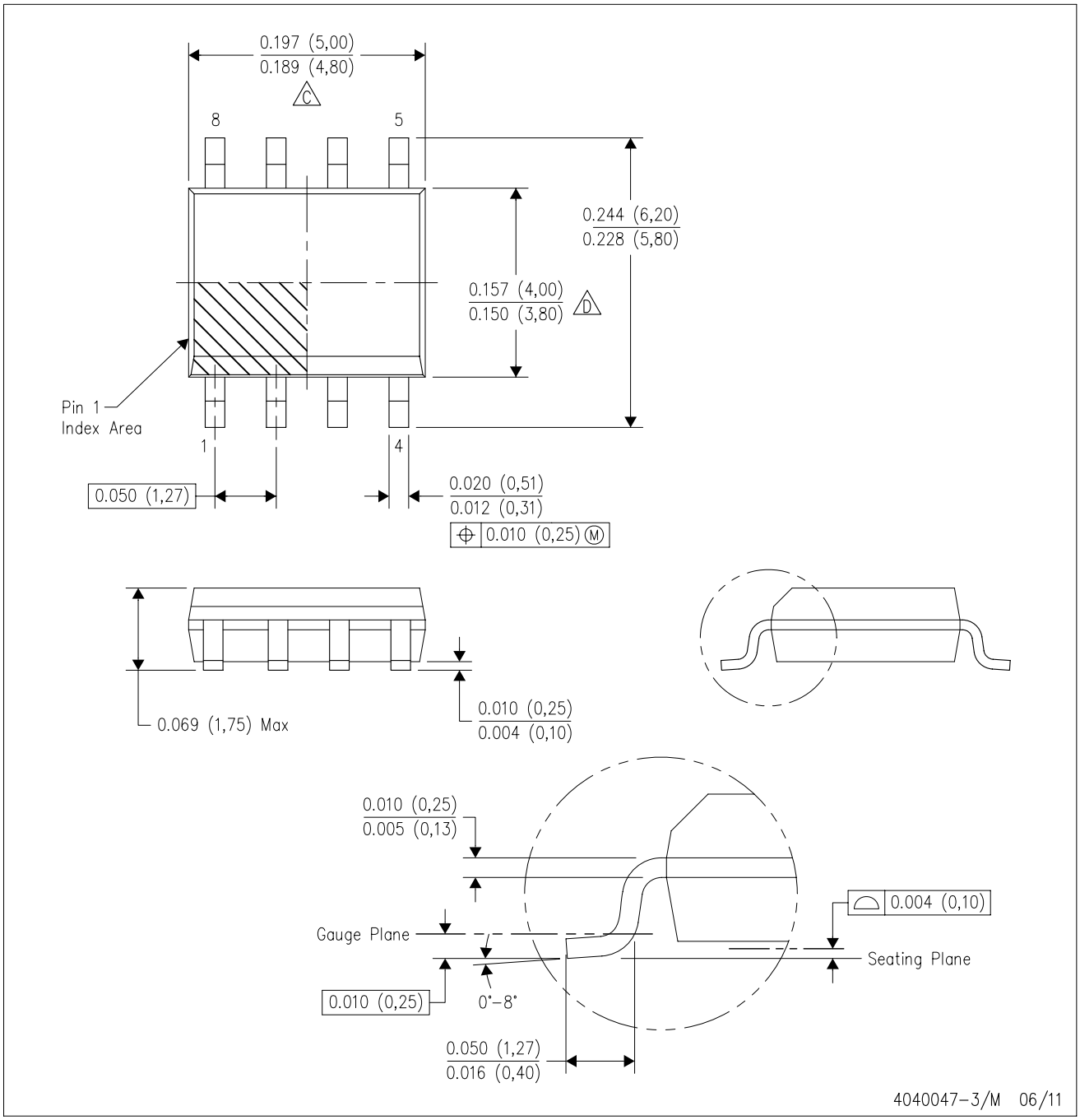

NOTES:
A. All linear dimensions are in inches (millimeters).
B. This drawing is subject to change without notice.
C. Body length does not include mold flash, protrusions, or gate burrs. Mold flash, protrusions, or gate burrs shall not exceed 0.006 (0,15) each side.
D. Body width does not include interlead flash. Interlead flash shall not exceed 0.017 (0,43) each side.
E. Reference JEDEC MS–012 variation AA.

www.BDTIC.com/TI

D (R–PDSO–G8) PLASTIC SMALL OUTLINE

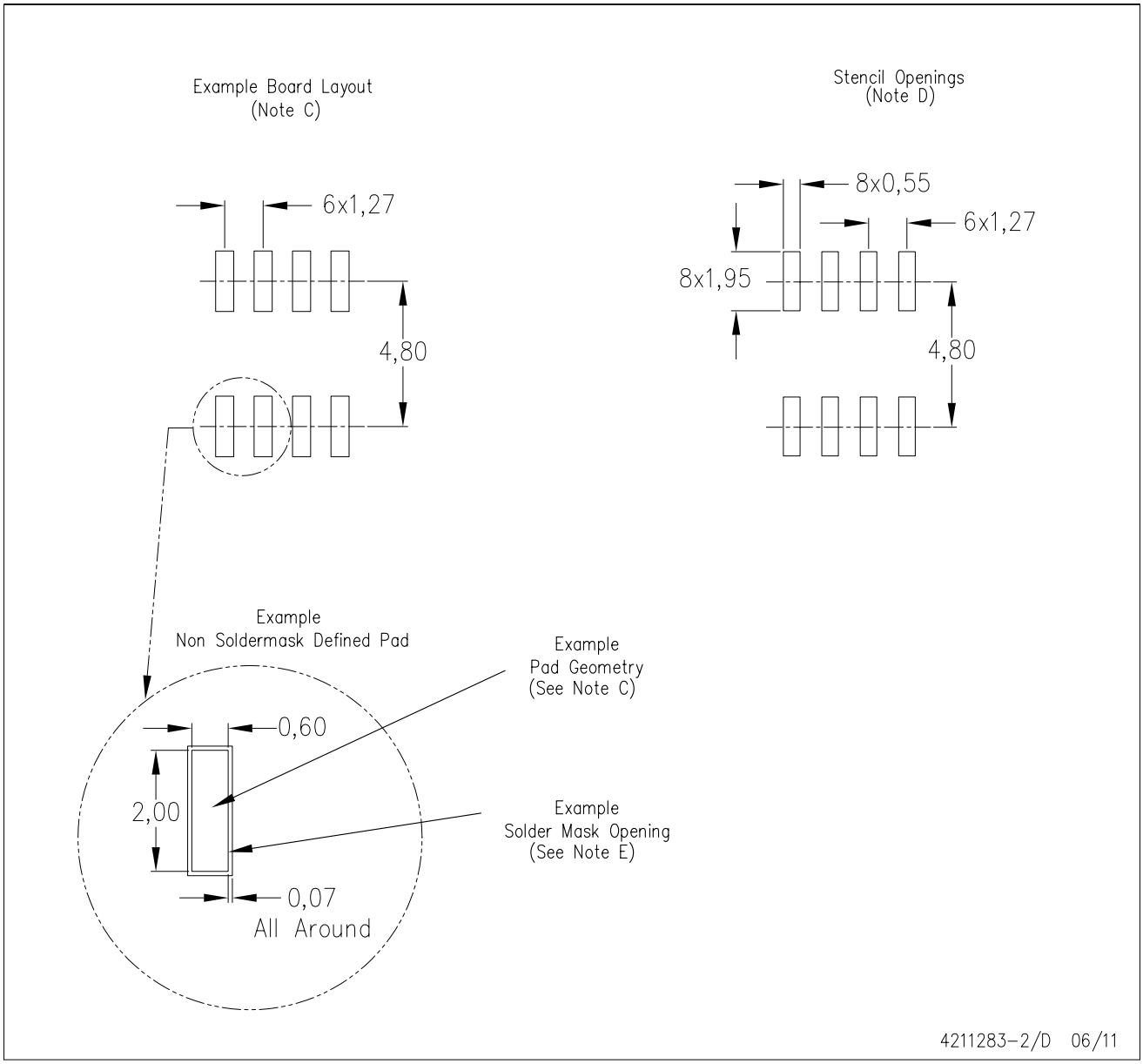

NOTES:
A. All linear dimensions are in millimeters.
B. This drawing is subject to change without notice.
C. Publication IPC–7351 is recommended for alternate designs.
D. Laser cutting apertures with trapezoidal walls and also rounding corners will offer better paste release. Customers should contact their board assembly site for stencil design recommendations. Refer to IPC–7525 for other stencil recommendations.
E. Customers should contact their board fabrication site for solder mask tolerances between and around signal pads.

www.BDTIC.com/TI

MECHANICAL DATA

PS (R-PDSO-G8) **PLASTIC SMALL-OUTLINE PACKAGE**

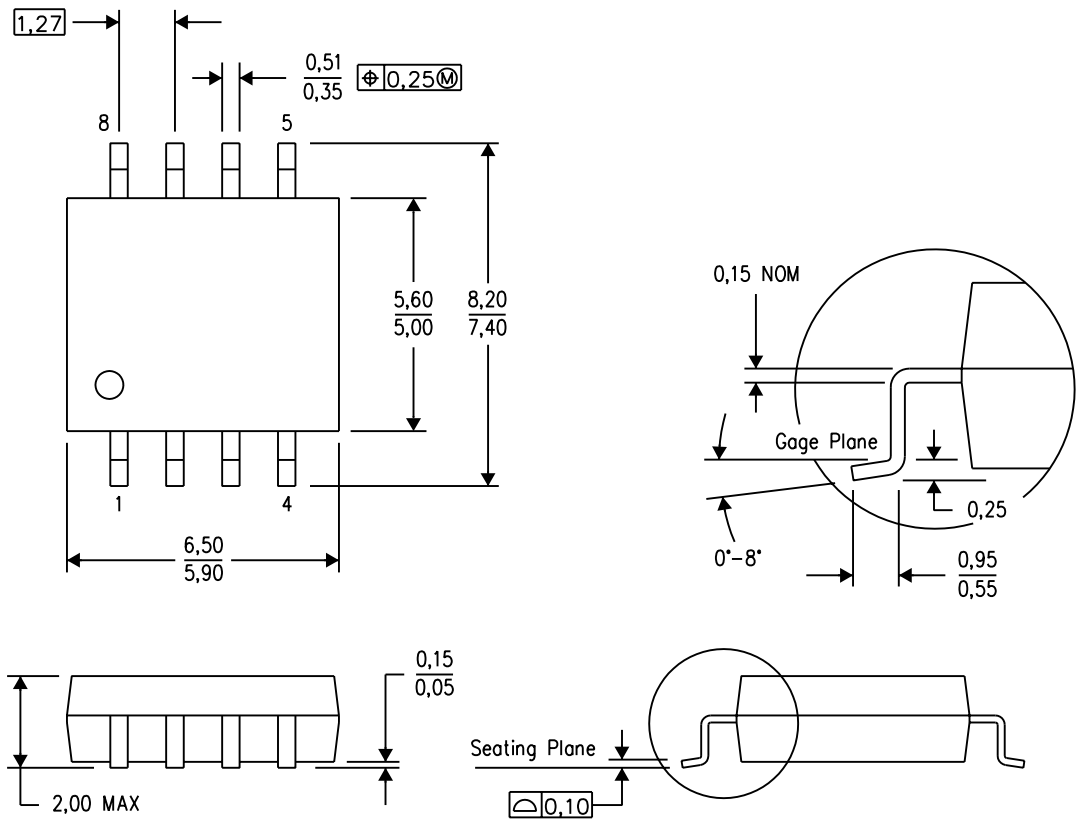

4040063/C 03/03

NOTES:
A. All linear dimensions are in millimeters.
B. This drawing is subject to change without notice.
C. Body dimensions do not include mold flash or protrusion, not to exceed 0,15.

www.BDTIC.com/TI

PW (R-PDSO-G8) PLASTIC SMALL OUTLINE

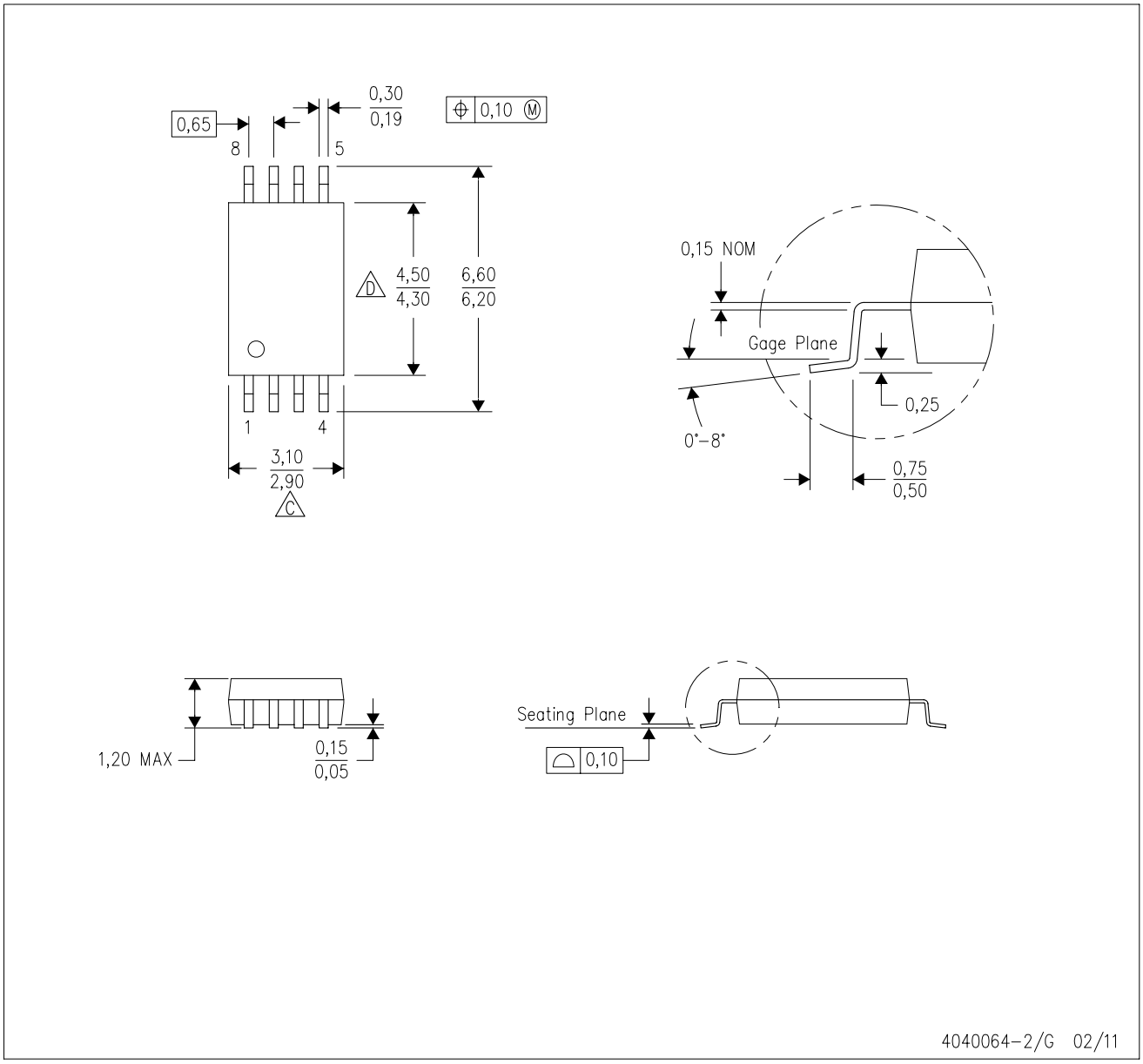

NOTES:
A. All linear dimensions are in millimeters. Dimensioning and tolerancing per ASME Y14.5M-1994.
B. This drawing is subject to change without notice.
C. Body length does not include mold flash, protrusions, or gate burrs. Mold flash, protrusions, or gate burrs shall not exceed 0,15 each side.
D. Body width does not include interlead flash. Interlead flash shall not exceed 0,25 each side.
E. Falls within JEDEC MO-153

www.BDTIC.com/TI

IMPORTANT NOTICE

Texas Instruments Incorporated and its subsidiaries (TI) reserve the right to make corrections, modifications, enhancements, improvements, and other changes to its products and services at any time and to discontinue any product or service without notice. Customers should obtain the latest relevant information before placing orders and should verify that such information is current and complete. All products are sold subject to TI's terms and conditions of sale supplied at the time of order acknowledgment.

TI warrants performance of its hardware products to the specifications applicable at the time of sale in accordance with TI's standard warranty. Testing and other quality control techniques are used to the extent TI deems necessary to support this warranty. Except where mandated by government requirements, testing of all parameters of each product is not necessarily performed.

TI assumes no liability for applications assistance or customer product design. Customers are responsible for their products and applications using TI components. To minimize the risks associated with customer products and applications, customers should provide adequate design and operating safeguards.

TI does not warrant or represent that any license, either express or implied, is granted under any TI patent right, copyright, mask work right, or other TI intellectual property right relating to any combination, machine, or process in which TI products or services are used. Information published by TI regarding third-party products or services does not constitute a license from TI to use such products or services or a warranty or endorsement thereof. Use of such information may require a license from a third party under the patents or other intellectual property of the third party, or a license from TI under the patents or other intellectual property of TI.

Reproduction of TI information in TI data books or data sheets is permissible only if reproduction is without alteration and is accompanied by all associated warranties, conditions, limitations, and notices. Reproduction of this information with alteration is an unfair and deceptive business practice. TI is not responsible or liable for such altered documentation. Information of third parties may be subject to additional restrictions.

Resale of TI products or services with statements different from or beyond the parameters stated by TI for that product or service voids all express and any implied warranties for the associated TI product or service and is an unfair and deceptive business practice. TI is not responsible or liable for any such statements.

TI products are not authorized for use in safety-critical applications (such as life support) where a failure of the TI product would reasonably be expected to cause severe personal injury or death, unless officers of the parties have executed an agreement specifically governing such use. Buyers represent that they have all necessary expertise in the safety and regulatory ramifications of their applications, and acknowledge and agree that they are solely responsible for all legal, regulatory and safety-related requirements concerning their products and any use of TI products in such safety-critical applications, notwithstanding any applications-related information or support that may be provided by TI. Further, Buyers must fully indemnify TI and its representatives against any damages arising out of the use of TI products in such safety-critical applications.

TI products are neither designed nor intended for use in military/aerospace applications or environments unless the TI products are specifically designated by TI as military-grade or "enhanced plastic." Only products designated by TI as military-grade meet military specifications. Buyers acknowledge and agree that any such use of TI products which TI has not designated as military-grade is solely at the Buyer's risk, and that they are solely responsible for compliance with all legal and regulatory requirements in connection with such use.

TI products are neither designed nor intended for use in automotive applications or environments unless the specific TI products are designated by TI as compliant with ISO/TS 16949 requirements. Buyers acknowledge and agree that, if they use any non-designated products in automotive applications, TI will not be responsible for any failure to meet such requirements.

Following are URLs where you can obtain information on other Texas Instruments products and application solutions:

Products		**Applications**	
Audio	www.ti.com/audio	Communications and Telecom	www.ti.com/communications
Amplifiers	amplifier.ti.com	Computers and Peripherals	www.ti.com/computers
Data Converters	dataconverter.ti.com	Consumer Electronics	www.ti.com/consumer-apps
DLP® Products	www.dlp.com	Energy and Lighting	www.ti.com/energy
DSP	dsp.ti.com	Industrial	www.ti.com/industrial
Clocks and Timers	www.ti.com/clocks	Medical	www.ti.com/medical
Interface	interface.ti.com	Security	www.ti.com/security
Logic	logic.ti.com	Space, Avionics and Defense	www.ti.com/space-avionics-defense
Power Mgmt	power.ti.com	Transportation and Automotive	www.ti.com/automotive
Microcontrollers	microcontroller.ti.com	Video and Imaging	www.ti.com/video
RFID	www.ti-rfid.com	Wireless	www.ti.com/wireless-apps
RF/IF and ZigBee® Solutions	www.ti.com/lprf		

TI E2E Community Home Page e2e.ti.com

Mailing Address: Texas Instruments, Post Office Box 655303, Dallas, Texas 75265
Copyright © 2011, Texas Instruments Incorporated

www.BDTIC.com/TI