- **Wide Range of Supply Voltages Over Specified Temperature Range:**
  T_A = –40°C to 85°C . . . 2 V to 8 V
- **Fully Characterized at 3 V and 5 V**
- **Single-Supply Operation**
- **Common-Mode Input-Voltage Range Extends Below the Negative Rail and up to V_{DD} –1 V at T_A = 25°C**
- **Output Voltage Range Includes Negative Rail**
- **High Input Impedance . . . 10^{12} Ω Typ**
- **ESD-Protection Circuitry**
- **Designed-In Latch-Up Immunity**

TLV2332
D OR P PACKAGE
(TOP VIEW)

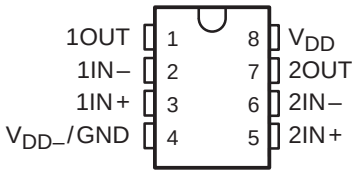

TLV2332
PW PACKAGE
(TOP VIEW)

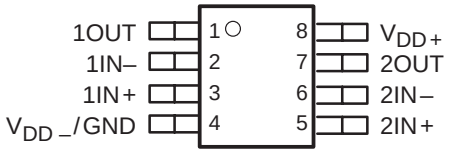

TLV2334
D OR N PACKAGE
(TOP VIEW)

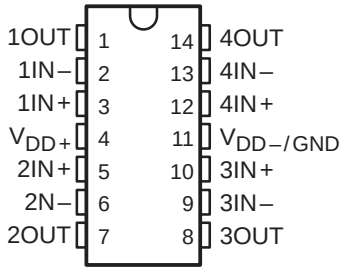

TLV2334
PW PACKAGE
(TOP VIEW)

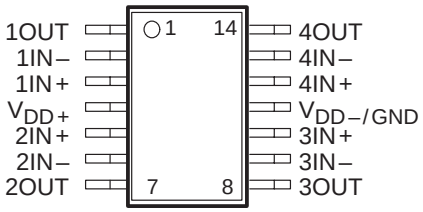

description

The TLV233x operational amplifiers are in a family of devices that has been specifically designed for use in low-voltage single-supply applications. Unlike the TLV2322 which is optimized for ultra-low power, the TLV233x is designed to provide a combination of low power and good ac performance. Each amplifier is fully functional down to a minimum supply voltage of 2 V, is fully characterized, tested, and specified at both 3-V and 5-V power supplies. The common-mode input-voltage range includes the negative rail and extends to within 1 V of the positive rail.

Having a maximum supply current of only 310 µA per amplifier over full temperature range, the TLV233x devices offer a combination of good ac performance and microampere supply currents. From a 3-V power supply, the amplifier's typical slew rate is 0.38 V/µs and its bandwidth is 300 kHz.

AVAILABLE OPTIONS

T_A	V_{IO}max AT 25°C	PACKAGED DEVICES				CHIP FORMS§ (Y)
		SMALL OUTLINE† (D)	PLASTIC DIP (N)	PLASTIC DIP (P)	TSSOP‡ (PW)	
–40°C to 85°C	9 mV	TLV2332ID	—	TLV2332IP	TLV2332IPWLE	TLV2332Y
	10 mV	TLV2334ID	TLV2334IN	—	TLV2334IPWLE	TLV2334Y

† The D package is available taped and reeled. Add R suffix to the device type (e.g., TLV2332IDR).
‡ The PW package is only available left-end taped and reeled (e.g., TLV2332IPWLE).
§ Chip forms are tested at 25°C only.

Please be aware that an important notice concerning availability, standard warranty, and use in critical applications of Texas Instruments semiconductor products and disclaimers thereto appears at the end of this data sheet.

LinCMOS is a trademark of Texas Instruments Incorporated.

PRODUCTION DATA information is current as of publication date. Products conform to specifications per the terms of Texas Instruments standard warranty. Production processing does not necessarily include testing of all parameters.

Copyright © 1997, Texas Instruments Incorporated

www.BDTIC.com/TI

description (continued)

These amplifiers offer a level of ac performance greater than that of many other devices operating at comparable power levels. The TLV233x operational amplifiers are especially well suited for use in low-current or battery-powered applications.

Low-voltage and low-power operation has been made possible by using the Texas Instruments silicon-gate LinCMOS™ technology. The LinCMOS process also features extremely high input impedance and ultra-low bias currents making these amplifiers ideal for interfacing to high-impedance sources such as sensor circuits or filter applications.

To facilitate the design of small portable equipment, the TLV233x is made available in a wide range of package options, including the small-outline and thin-shrink small-outline package (TSSOP). The TSSOP package has significantly reduced dimensions compared to a standard surface-mount package. Its maximum height of only 1.1 mm makes it particularly attractive when space is critical.

The device inputs and outputs are designed to withstand –100-mA currents without sustaining latch-up. The TLV233x incorporates internal ESD-protection circuits that prevents functional failures at voltages up to 2000 V as tested under MIL-STD 883C, Method 3015.2; however, care should be exercised in handling these devices as exposure to ESD may result in the degradation of the device parametric performance.

TLV2332Y chip information

This chip, when properly assembled, display characteristics similar to the TLV2332. Thermal compression or ultrasonic bonding may be used on the doped-aluminum bonding pads. Chips may be mounted with conductive epoxy or a gold-silicon preform.

BONDING PAD ASSIGNMENTS

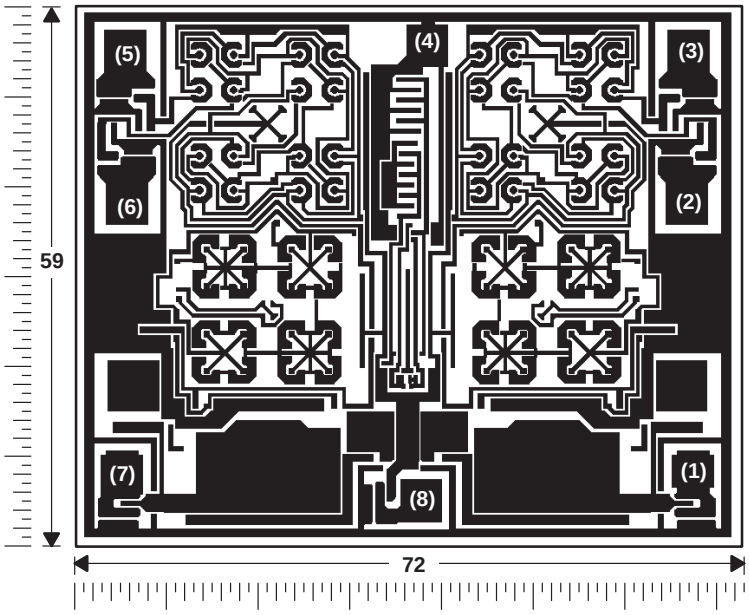

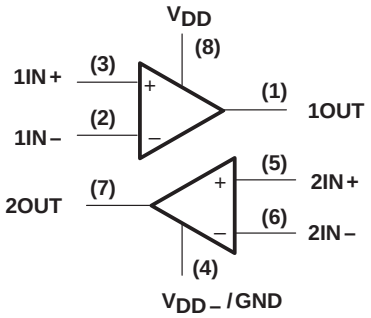

CHIP THICKNESS: 15 MILS TYPICAL

BONDING PADS: 4 × 4 MILS MINIMUM

$T_J$max = 150°C

TOLERANCES ARE ±10%.

ALL DIMENSIONS ARE IN MILS.

PIN (4) IS INTERNALLY CONNECTED TO BACKSIDE OF CHIP.

www.BDTIC.com/TI

TLV2334Y chip information

This chip, when properly assembled, displays characteristics similar to the TLV2334. Thermal compression or ultrasonic bonding may be used on the doped-aluminum bonding pads. Chips may be mounted with conductive epoxy or a gold-silicon preform.

BONDING PAD ASSIGNMENTS

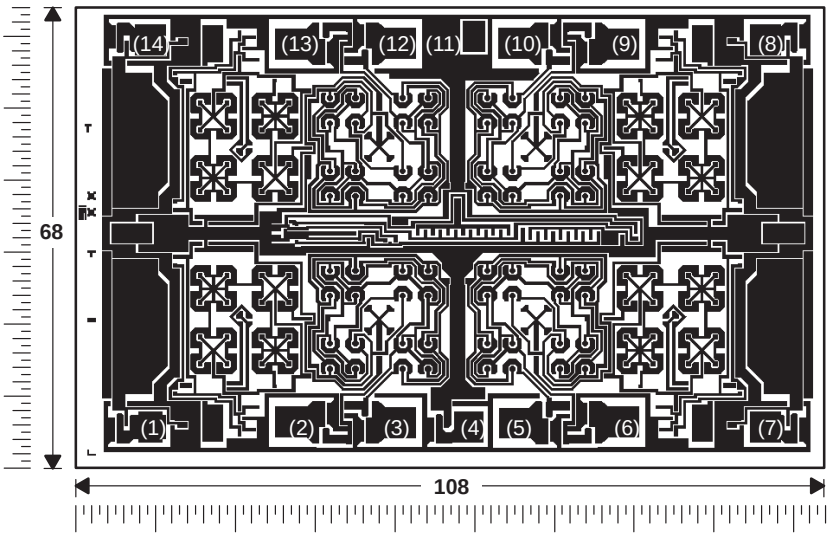

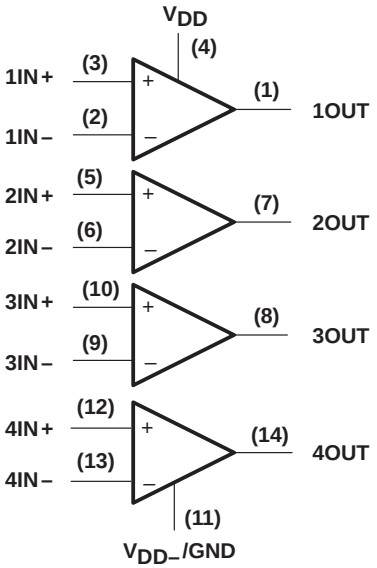

CHIP THICKNESS: 15 MILS TYPICAL

BONDING PADS: 4 × 4 MILS MINIMUM

$T_J$max = 150°C

TOLERANCES ARE ±10%.

ALL DIMENSIONS ARE IN MILS.

www.BDTIC.com/TI

equivalent schematic (each amplifier)

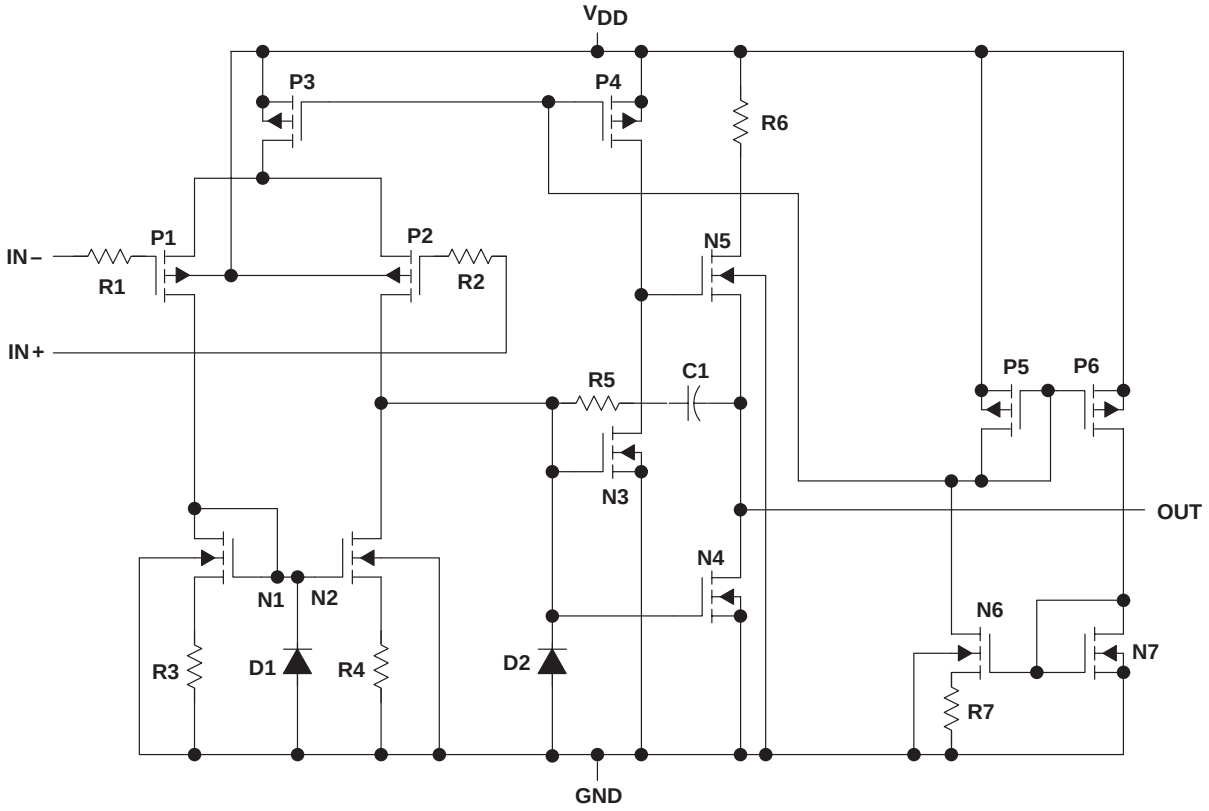

ACTUAL DEVICE COMPONENT COUNT†		
COMPONENT	TLV2332	TLV2334
Transistors	54	108
Resistors	14	28
Diodes	4	8
Capacitors	2	4

† Includes both amplifiers and all ESD, bias, and trim circuitry.

www.BDTIC.com/TI

absolute maximum ratings over operating free-air temperature (unless otherwise noted)†

Supply voltage, V_{DD} (see Note 1) . . . . . 8 V
Differential input voltage, V_{ID} (see Note 2) . . . . . $V_{DD}\pm$
Input voltage range, V_I (any input) . . . . . –0.3 V to V_{DD}
Input current, I_I . . . . . ±5 mA
Output current, I_O . . . . . ±30 mA
Duration of short-circuit current at (or below) T_A = 25°C (see Note 3) . . . . . unlimited
Continuous total dissipation . . . . . See Dissipation Rating Table
Operating free-air temperature range, T_A . . . . . –40°C to 85°C
Storage temperature range . . . . . –65°C to 150°C
Lead temperature 1,6 mm (1/16 inch) from case for 10 seconds . . . . . 260°C

† Stresses beyond those listed under "absolute maximum ratings" may cause permanent damage to the device. These are stress ratings only, and functional operation of the device at these or any other conditions beyond those indicated under "recommended operating conditions" is not implied. Exposure to absolute-maximum-rated conditions for extended periods may affect device reliability.

NOTES:
1. All voltage values, except differential voltages, are with respect to network ground.
2. Differential voltages are at the noninverting input with respect to the inverting input.
3. The output may be shorted to either supply. Temperature and/or supply voltages must be limited to ensure that the maximum dissipation rating is not exceeded (see application section).

DISSIPATION RATING TABLE

PACKAGE	$T_A \le 25°C$ POWER RATING	DERATING FACTOR ABOVE T_A = 25°C	T_A = 85°C POWER RATING
D–8	725 mW	5.8 mW/°C	377 mW
D–14	950 mW	7.6 mW/°C	494 mW
N	1575 mW	12.6 mW/°C	819 mW
P	1000 mW	8.0 mW/°C	520 mW
PW–8	525 mW	4.2 mW/°C	273 mW
PW–14	700 mW	5.6 mW/°C	364 mW

recommended operating conditions

		MIN	MAX	UNIT
Supply voltage, V_{DD}		2	8	V
Common-mode input voltage, V_{IC}	V_{DD} = 3 V	–0.2	1.8	V
	V_{DD} = 5 V	–0.2	3.8	
Operating free-air temperature, T_A		–40	85	°C

www.BDTIC.com/TI

TLV2332I electrical characteristics at specified free-air temperature

PARAMETER		TEST CONDITIONS	T_A†	TLV2332I						UNIT
				V_{DD} = 3 V			V_{DD} = 5 V			
				MIN	TYP	MAX	MIN	TYP	MAX	
V_{IO}	Input offset voltage	V_O = 1 V, V_{IC} = 1 V, R_S = 50 Ω, R_L = 100 kΩ	25°C		0.6	9		1.1	9	mV
			Full range			11			11	
α_{VIO}	Average temperature coefficient of input offset voltage		25°C to 85°C		1			1.7		µV/°C
I_{IO}	Input offset current (see Note 4)	V_O = 1 V, V_{IC} = 1 V	25°C		0.1			0.1		pA
			85°C		22	1000		24	1000	
I_{IB}	Input bias current (see Note 4)	V_O = 1 V, V_{IC} = 1 V	25°C		0.6			0.6		pA
			85°C		175	2000		200	2000	
V_{ICR}	Common-mode input voltage range (see Note 5)		25°C	–0.2 to 2	–0.3 to 2.3		–0.2 to 4	–0.3 to 4.2		V
			Full range	–0.2 to 1.8			–0.2 to 3.8			
V_{OH}	High-level output voltage	V_{IC} = 1 V, V_{ID} = 100 mV, I_{OH} = –1 mA	25°C	1.75	1.9		3.2	3.9		V
			Full range	1.7			3			
V_{OL}	Low-level output voltage	V_{IC} = 1 V, V_{ID} = –100 mV, I_{OL} = 1 mA	25°C		115	150		95	150	mV
			Full range			190			190	
A_{VD}	Large-signal differential voltage amplification	V_{IC} = 1 V, R_L = 100 kΩ, See Note 6	25°C	25	83		25	170		V/mV
			Full range	15			15			
CMRR	Common-mode rejection ratio	V_O = 1 V, V_{IC} = V_{ICR}min, R_S = 50 Ω	25°C	65	92		65	91		dB
			Full range	60			60			
k_{SVR}	Supply-voltage rejection ratio ($\Delta V_{DD}/\Delta V_{IO}$)	V_{IC} = 1 V, V_O = 1 V, R_S = 50 Ω	25°C	70	94		70	94		dB
			Full range	65			65			
I_{DD}	Supply current	V_O = 1 V, V_{IC} = 1 V, No load	25°C		160	500		210	560	µA
			Full range			620			800	

† Full range is –40°C to 85°C.

NOTES: 4. The typical values of input bias current and input offset current below 5 pA are determined mathematically.
5. This range also applies to each input individually.
6. At V_{DD} = 5 V, V_O = 0.25 V to 2 V; at V_{DD} = 3 V, V_O = 0.5 V to 1.5 V.

www.BDTIC.com/TI

TLV2332I operating characteristics at specified free-air temperature, V_{DD} = 3 V

PARAMETER		TEST CONDITIONS		T_A	TLV2332I MIN	TLV2332I TYP	TLV2332I MAX	UNIT
SR	Slew rate at unity gain	V_{IC} = 1 V, R_L = 100 kΩ, See Figure 34	$V_{I(PP)}$ = 1 V, C_L = 20 pF,	25°C		0.38		V/µs
				85°C		0.29		
V_n	Equivalent input noise voltage	f =1 kHz, See Figure 35	R_S = 20 Ω,	25°C		32		nV/√Hz
B_{OM}	Maximum output-swing bandwidth	$V_O = V_{OH}$, R_L = 100 kΩ,	C_L = 20 pF, See Figure 34	25°C		34		kHz
				85°C		32		
B_1	Unity-gain bandwidth	V_I = 10 mV, R_L = 100 kΩ,	C_L = 20 pF, See Figure 36	25°C		300		kHz
				85°C		235		
ϕ_m	Phase margin	V_I = 10 mV, C_L = 20 pF, See Figure 36	f = B_1, R_L = 100 kΩ,	–40°C		42°		
				25°C		39°		
				85°C		36°		

TLV2332I operating characteristics at specified free-air temperature, V_{DD} = 5 V

PARAMETER		TEST CONDITIONS		T_A	TLV2332I MIN	TLV2332I TYP	TLV2332I MAX	UNIT
SR	Slew rate at unity gain	V_{IC} = 1 V, R_L = 100 kΩ, C_L = 20 pF, See Figure 34	$V_{I(PP)}$ = 1 V	25°C		0.43		V/µs
				85°C		0.35		
			$V_{I(PP)}$ = 2.5 V	25°C		0.40		
				85°C		0.32		
V_n	Equivalent input noise voltage	f =1 kHz, See Figure 35	R_S = 20 Ω,	25°C		32		nV/√Hz
B_{OM}	Maximum output-swing bandwidth	$V_O = V_{OH}$, R_L = 100 kΩ,	C_L = 20 pF, See Figure 34	25°C		55		kHz
				85°C		45		
B_1	Unity-gain bandwidth	V_I = 10 mV, R_L = 100 kΩ,	C_L = 20 pF, See Figure 36	25°C		525		kHz
				85°C		370		
ϕ_m	Phase margin	V_I = 10 mV, C_L = 20 pF, See Figure 36	f = B_1, R_L = 100 kΩ,	–40°C		43°		
				25°C		40°		
				85°C		38°		

www.BDTIC.com/TI

TLV2334I electrical characteristics at specified free-air temperature

PARAMETER		TEST CONDITIONS	T_A†	TLV2334I						UNIT
				V_{DD} = 3 V			V_{DD} = 5 V			
				MIN	TYP	MAX	MIN	TYP	MAX	
V_{IO}	Input offset voltage	V_O = 1 V, V_{IC} = 1 V, R_S = 50 Ω, R_L = 100 kΩ	25°C		0.6	10		1.1	10	mV
			Full range			12			12	
α_{VIO}	Average temperature coefficient of input offset voltage		25°C to 85°C		1			1.7		µV/°C
I_{IO}	Input offset current (see Note 4)	V_O = 1 V, V_{IC} = 1 V	25°C		0.1			0.1		pA
			85°C		22	1000		24	1000	
I_{IB}	Input bias current (see Note 4)	V_O = 1 V, V_{IC} = 1 V	25°C		0.6			0.6		pA
			85°C		175	2000		200	2000	
V_{ICR}	Common-mode input voltage range (see Note 5)		25°C	–0.2 to 2	–0.3 to 2.3		–0.2 to 4	–0.3 to 4.2		V
			Full range	–0.2 to 1.8			–0.2 to 3.8			V
V_{OH}	High-level output voltage	V_{IC} = 1 V, V_{ID} = 100 mV, I_{OH} = –1 mA	25°C	1.75	1.9		3.2	3.9		V
			Full range	1.7			3			
V_{OL}	Low-level output voltage	V_{IC} = 1 V, V_{ID} = –100 mV, I_{OL} = 1 mA	25°C		115	150		95	150	mV
			Full range			190			190	
A_{VD}	Large-signal differential voltage amplification	V_{IC} = 1 V, R_L = 100 kΩ, See Note 6	25°C	25	83		25	170		V/mV
			Full range	15			15			
CMRR	Common-mode rejection ratio	V_O = 1 V, V_{IC} = V_{ICR}min, R_S = 50 Ω	25°C	65	92		65	91		dB
			Full range	60			60			
k_{SVR}	Supply-voltage rejection ratio ($\Delta V_{DD}/\Delta V_{IO}$)	V_{DD} = 3 V to 5 V, V_{IC} = 1 V, V_O = 1 V, R_S = 50 Ω	25°C	70	94		70	94		dB
			Full range	65			65			
I_{DD}	Supply current	V_O = 1 V, V_{IC} = 1 V, No load	25°C		320	1000		420	1120	µA
			Full range			1200			1600	

† Full range is –40°C to 85°C.

NOTES: 4. The typical values of input bias current and input offset current below 5 pA are determined mathematically.
5. This range also applies to each input individually.
6. At V_{DD} = 5 V, V_O = 0.25 V to 2 V; at V_{DD} = 3 V, V_O = 0.5 V to 1.5 V.

www.BDTIC.com/TI

TLV2334I operating characteristics at specified free-air temperature, V_{DD} = 3 V

PARAMETER		TEST CONDITIONS		T_A	TLV2334I MIN	TLV2334I TYP	TLV2334I MAX	UNIT
SR	Slew rate at unity gain	V_{IC} = 1 V, R_L = 100 kΩ, See Figure 34	$V_{I(PP)}$ = 1 V, C_L = 20 pF,	25°C		0.38		V/µs
				85°C		0.29		
V_n	Equivalent input noise voltage	f = 1 kHz, See Figure 35	R_S = 20 Ω,	25°C		32		nV/√Hz
B_{OM}	Maximum output-swing bandwidth	$V_O = V_{OH}$, R_L = 100 kΩ,	C_L = 20 pF, See Figure 34	25°C		34		kHz
				85°C		32		
B_1	Unity-gain bandwidth	V_I = 10 mV, R_L = 100 kΩ,	C_L = 20 pF, See Figure 36	25°C		300		kHz
				85°C		235		
ϕ_m	Phase margin	V_I = 10 mV, C_L = 20 pF, See Figure 36	f = B_1, R_L = 100 kΩ,	–40°C		42°		
				25°C		39°		
				85°C		36°		

TLV2334I operating characteristics at specified free-air temperature, V_{DD} = 5 V

PARAMETER		TEST CONDITIONS		T_A	TLV2334I MIN	TLV2334I TYP	TLV2334I MAX	UNIT
SR	Slew rate at unity gain	V_{IC} = 1 V, R_L = 100 kΩ, C_L = 20 pF, See Figure 34	$V_{I(PP)}$ = 1 V	25°C		0.43		V/µs
				85°C		0.35		
			$V_{I(PP)}$ = 2.5 V	25°C		0.40		
				85°C		0.32		
V_n	Equivalent input noise voltage	f = 1 kHz, See Figure 35	R_S = 20 Ω,	25°C		32		nV/√Hz
B_{OM}	Maximum output-swing bandwidth	$V_O = V_{OH}$, R_L = 100 kΩ,	C_L = 20 pF, See Figure 34	25°C		55		kHz
				85°C		45		
B_1	Unity-gain bandwidth	V_I = 10 mV, R_L = 100 kΩ,	C_L = 20 pF, See Figure 36	25°C		525		kHz
				85°C		370		
ϕ_m	Phase margin	V_I = 10 mV, C_L = 20 pF, See Figure 36	f = B_1, R_L = 100 kΩ,	–40°C		43°		
				25°C		40°		
				85°C		38°		

www.BDTIC.com/TI

TLV2332Y electrical characteristics, T_A = 25°C

PARAMETER		TEST CONDITIONS		TLV2332Y						UNIT
				V_{DD} = 3 V			V_{DD} = 5 V			
				MIN	TYP	MAX	MIN	TYP	MAX	
V_{IO}	Input offset voltage	V_O = 1 V, R_S = 50 Ω,	V_{IC} = 1 V, R_L = 100 kΩ		0.6			1.1		mV
I_{IO}	Input offset current (see Note 4)	V_O = 1 V,	V_{IC} = 1 V		0.1			0.1		pA
I_{IB}	Input bias current (see Note 4)	V_O = 1 V,	V_{IC} = 1 V		0.6			0.6		pA
V_{ICR}	Common-mode input voltage range (see Note 5)				–0.3 to 2.3			–0.3 to 4.2		V
V_{OH}	High-level output voltage	V_{IC} = 1 V, I_{OH} = –1 mA	V_{ID} = 100 mV,		1.9			3.9		V
V_{OL}	Low-level output voltage	V_{IC} = 1 V, I_{OL} = 1 mA	V_{ID} = 100 mV,		115			95		mV
A_{VD}	Large-signal differential voltage amplification	V_{IC} = 1 V, See Note 6	R_L = 100 kΩ,		83			170		V/mV
CMRR	Common-mode rejection ratio	V_O = 1 V, R_S = 50 Ω	V_{IC} = V_{ICR}min,		92			91		dB
k_{SVR}	Supply-voltage rejection ratio ($\Delta V_{DD}/\Delta V_{ID}$)	V_O = 1 V, R_S = 50 Ω	V_{IC} = 1 V,		94			94		dB
I_{DD}	Supply current	V_O = 1 V, No load	V_{IC} = 1 V,		160			210		µA

NOTES: 4. The typical values of input bias current and input offset current below 5 pA are determined mathematically.
5. This range also applies to each input individually.
6. At V_{DD} = 5 V, V_O = 0.25 V to 2 V; at V_{DD} = 3 V, V_O = 0.5 V to 1.5 V.

www.BDTIC.com/TI

TLV2334Y electrical characteristics, T_A = 25°C

PARAMETER		TEST CONDITIONS		TLV2334Y						UNIT
				V_{DD} = 3 V			V_{DD} = 5 V			
				MIN	TYP	MAX	MIN	TYP	MAX	
V_{IO}	Input offset voltage	V_O = 1 V, R_S = 50 Ω,	V_{IC} = 1 V R_L = 100 kΩ		0.6			1.1		mV
I_{IO}	Input offset current (see Note 4)	V_O = 1 V,	V_{IC} = 1 V		0.1			0.1		pA
I_{IB}	Input bias current (see Note 4)	V_O = 1 V,	V_{IC} = 1 V		0.6			0.6		pA
V_{ICR}	Common-mode input voltage range (see Note 5)				–0.3 to 2.3			–0.3 to 4.2		V
V_{OH}	High-level output voltage	V_{IC} = 1 V, I_{OH} = –1 mA	V_{ID} = 100 mV,		1.9			3.9		V
V_{OL}	Low-level output voltage	V_{IC} = 1 V, I_{OL} = 1 mA	V_{ID} = –100 mV,		115			95		mV
A_{VD}	Large-signal differential voltage amplification	V_{IC} = 1 V, See Note 6	R_L = 100 kΩ,		83			170		V/mV
CMRR	Common-mode rejection ratio	V_O = 1 V, R_S = 50 Ω	V_{IC} = V_{ICR}min,		92			91		dB
k_{SVR}	Supply-voltage rejection ratio ($\Delta V_{DD}/\Delta V_{ID}$)	V_{IC} = 1 V, R_S = 50 Ω	V_O = 1 V,		94			94		dB
I_{DD}	Supply current	V_O = 1 V, No load	V_{IC} = 1 V,		320			420		µA

NOTES: 4. The typical values of input bias current offset current below 5 pA are determined mathematically.
5. This range also applies to each input individually.
6. At V_{DD} = 5 V, V_O = 0.25 V to 2 V; at V_{DD} = 3 V, V_O = 0.5 V to 1.5 V.

www.BDTIC.com/TI

TYPICAL CHARACTERISTICS

Table of Graphs

			FIGURE
V_{IO}	Input offset voltage	Distribution	1 – 4
α_{VIO}	Input offset voltage temperature coefficient	Distribution	5 – 8
I_{IB}	Input bias current	vs Free-air temperature	9
I_{IO}	Input offset current	vs Free-air temperature	9
V_{IC}	Common-mode input voltage	vs Supply voltage	10
V_{OH}	High-level output voltage	vs High-level output current vs Supply voltage vs Free-air temperature	11 12 13
V_{OL}	Low-level output voltage	vs Common-mode input voltage vs Free-air temperature vs Differential input voltage vs Low-level output current	14 15, 16 17 18
A_{VD}	Large-signal differential voltage amplification	vs Supply voltage vs Free-air temperature vs Frequency	19 20 21, 22
I_{DD}	Supply current	vs Supply voltage vs Free-air temperature	23 24
SR	Slew rate	vs Supply voltage vs Free-air temperature	25 26
$V_{O(PP)}$	Maximum peak-to-peak output voltage	vs Frequency	27
B_1	Unity-gain bandwidth	vs Supply voltage vs Free-air temperature	28 29
ϕ_m	Phase margin	vs Supply voltage vs Free-air temperature vs Load capacitance	30 31 32
	Phase shift	vs Frequency	21, 22
V_n	Equivalent input noise voltage	vs Frequency	33

www.BDTIC.com/TI

TYPICAL CHARACTERISTICS

DISTRIBUTION OF TLV2332 INPUT OFFSET VOLTAGE

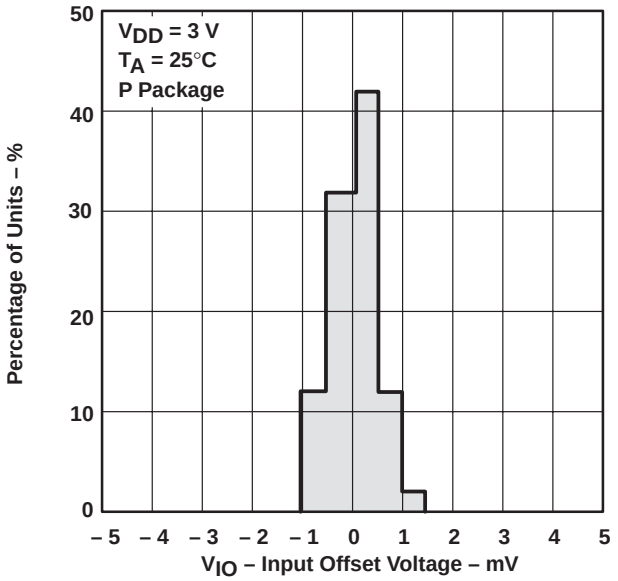

Figure 1

DISTRIBUTION OF TLV2332 INPUT OFFSET VOLTAGE

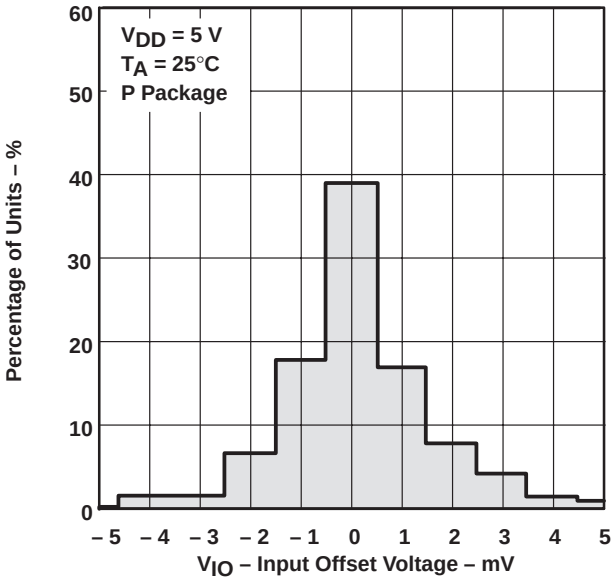

Figure 2

DISTRIBUTION OF TLV2334 INPUT OFFSET VOLTAGE

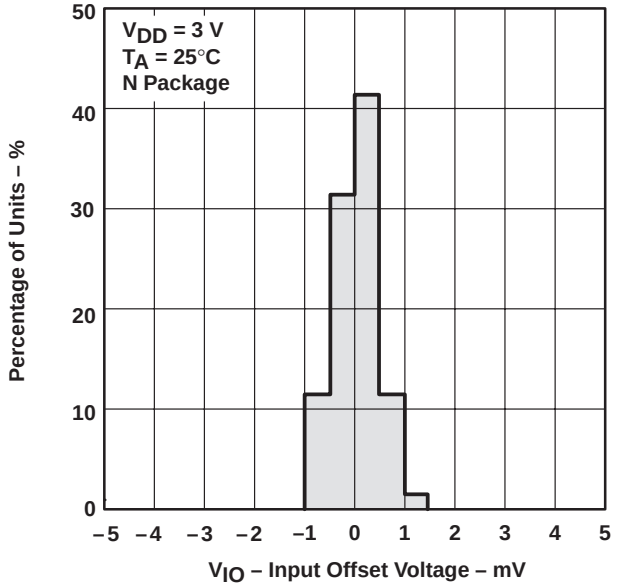

Figure 3

DISTRIBUTION OF TLV2334 INPUT OFFSET VOLTAGE

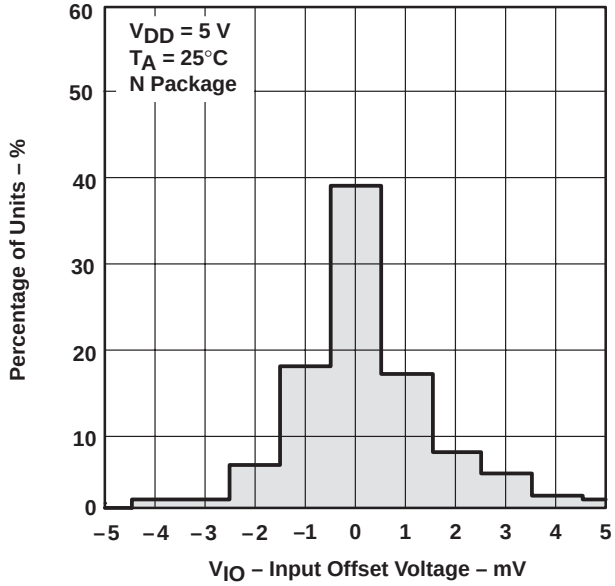

Figure 4

www.BDTIC.com/TI

TYPICAL CHARACTERISTICS

DISTRIBUTION OF TLV2332 INPUT OFFSET VOLTAGE TEMPERATURE COEFFICIENT

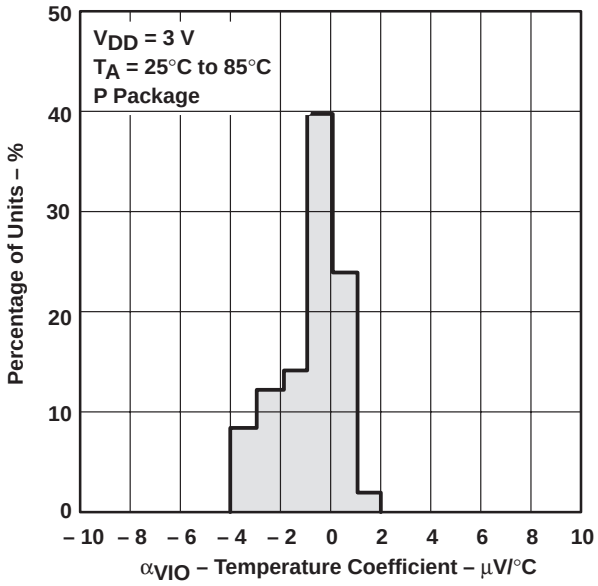

Figure 5

DISTRIBUTION OF TLV2332 INPUT OFFSET VOLTAGE TEMPERATURE COEFFICIENT

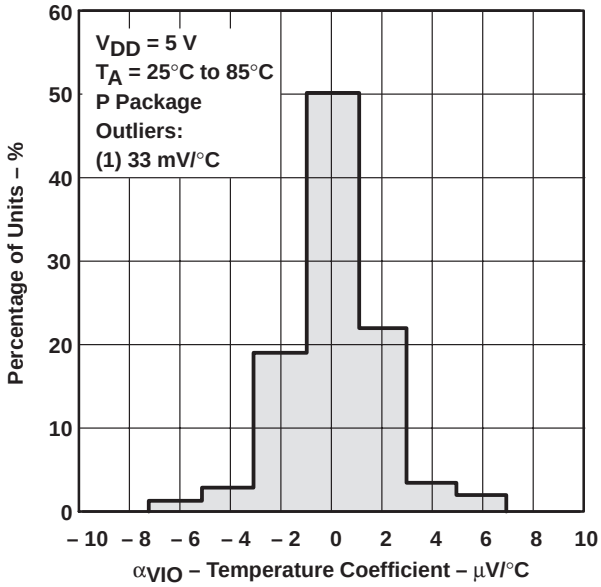

Figure 6

DISTRIBUTION OF TLV2334 INPUT OFFSET VOLTAGE TEMPERATURE COEFFICIENT

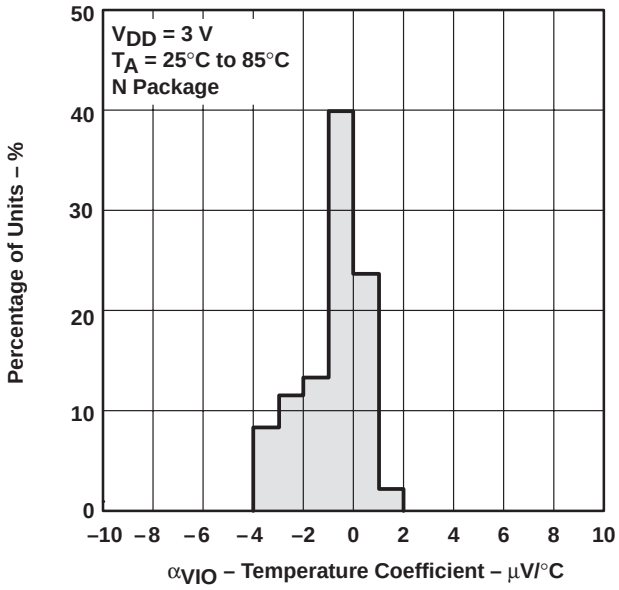

Figure 7

DISTRIBUTION OF TLV2334 INPUT OFFSET VOLTAGE TEMPERATURE COEFFICIENT

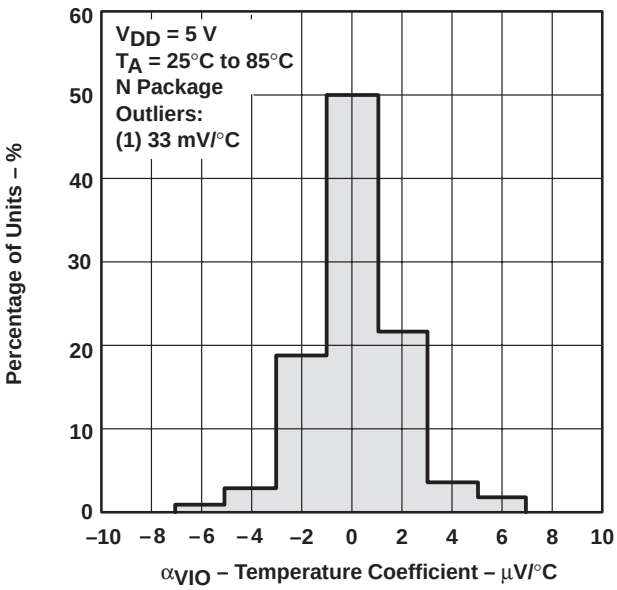

Figure 8

www.BDTIC.com/TI

TYPICAL CHARACTERISTICS

INPUT BIAS CURRENT AND INPUT OFFSET CURRENT vs FREE-AIR TEMPERATURE

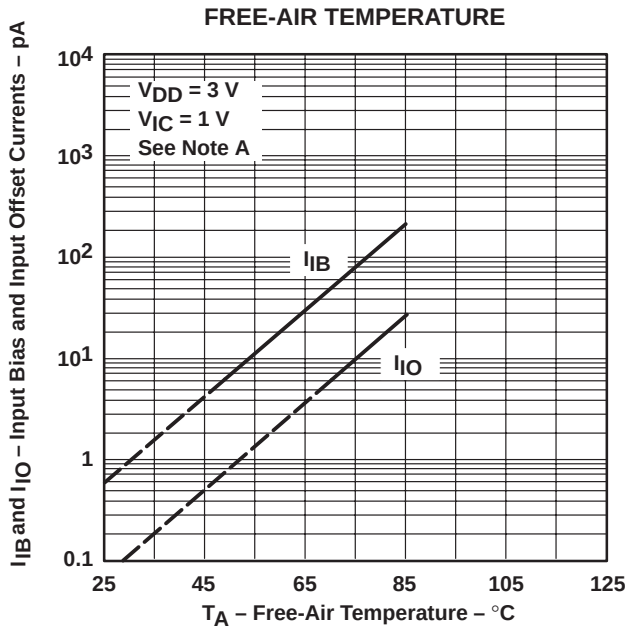

NOTE: The typical values of input bias current and input offset current below 5 pA were determined mathematically.

Figure 9

COMMON-MODE INPUT VOLTAGE vs SUPPLY VOLTAGE

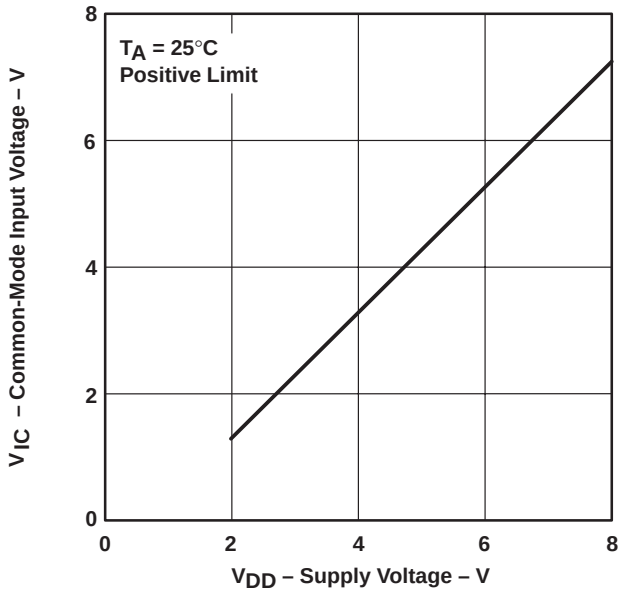

Figure 10

HIGH-LEVEL OUTPUT VOLTAGE vs HIGH-LEVEL OUTPUT CURRENT

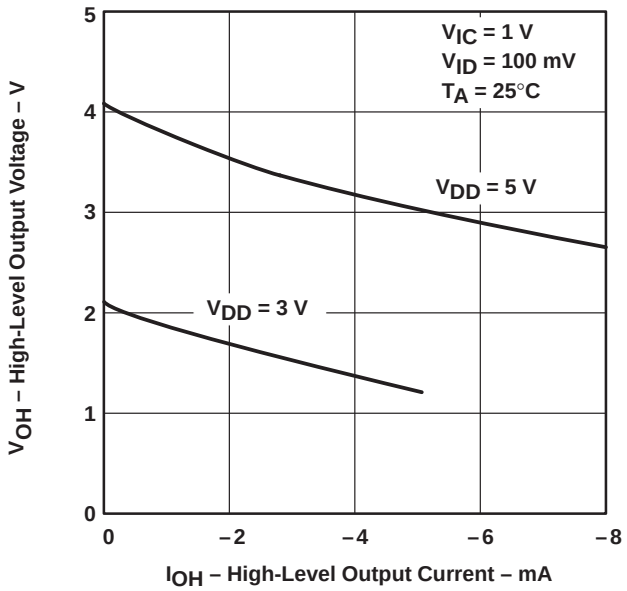

Figure 11

HIGH-LEVEL OUTPUT VOLTAGE vs SUPPLY VOLTAGE

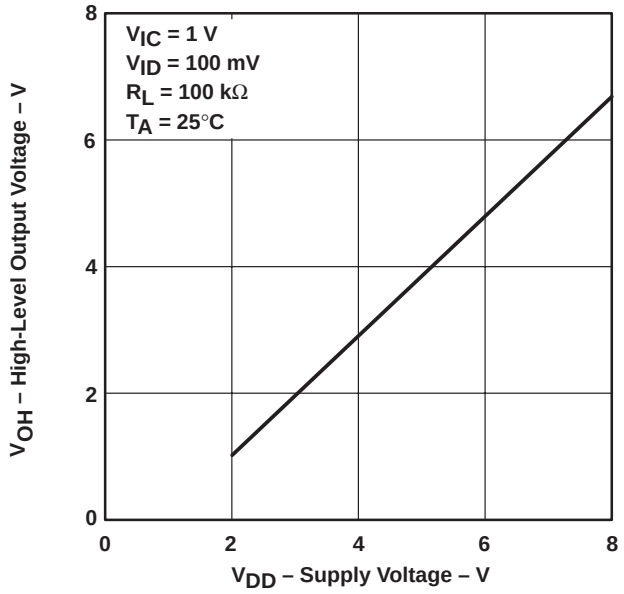

Figure 12

www.BDTIC.com/TI

TYPICAL CHARACTERISTICS

HIGH-LEVEL OUTPUT VOLTAGE vs FREE-AIR TEMPERATURE

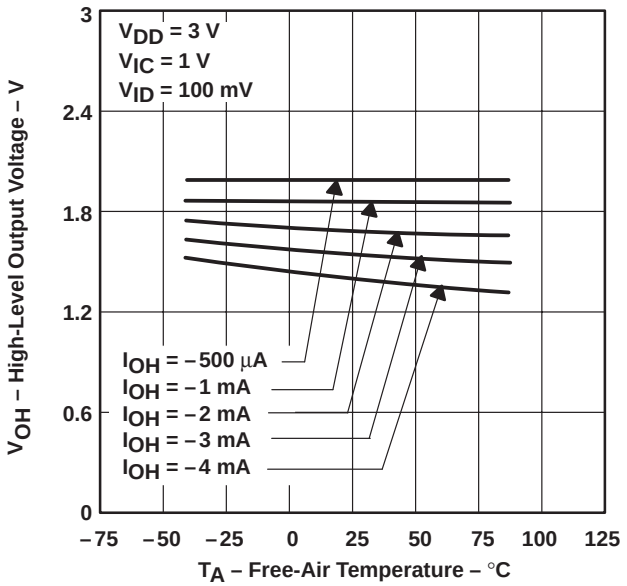

Figure 13

LOW-LEVEL OUTPUT VOLTAGE vs COMMON-MODE INPUT VOLTAGE

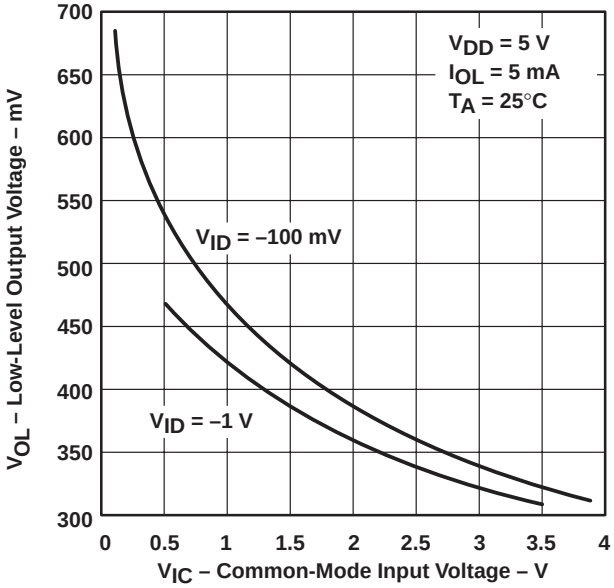

Figure 14

LOW-LEVEL OUTPUT VOLTAGE vs FREE-AIR TEMPERATURE

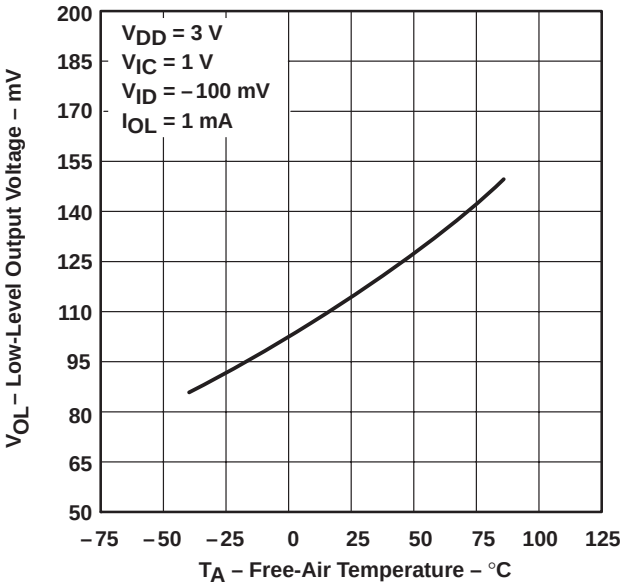

Figure 15

LOW-LEVEL OUTPUT VOLTAGE vs FREE-AIR TEMPERATURE

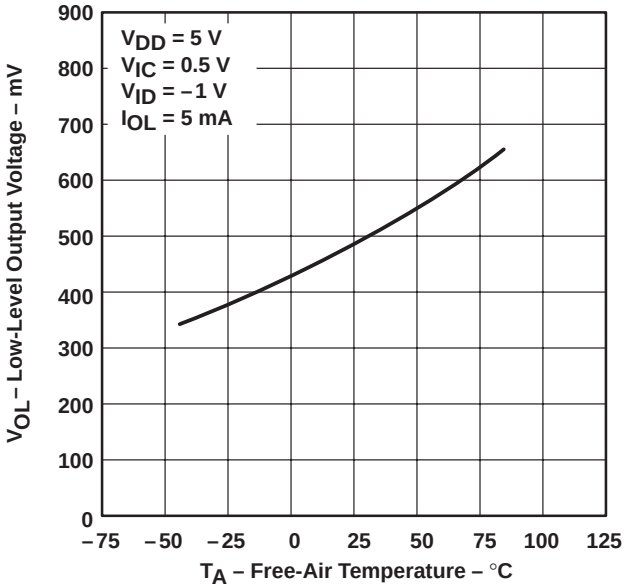

Figure 16

www.BDTIC.com/TI

TYPICAL CHARACTERISTICS

LOW-LEVEL OUTPUT VOLTAGE vs DIFFERENTIAL INPUT VOLTAGE

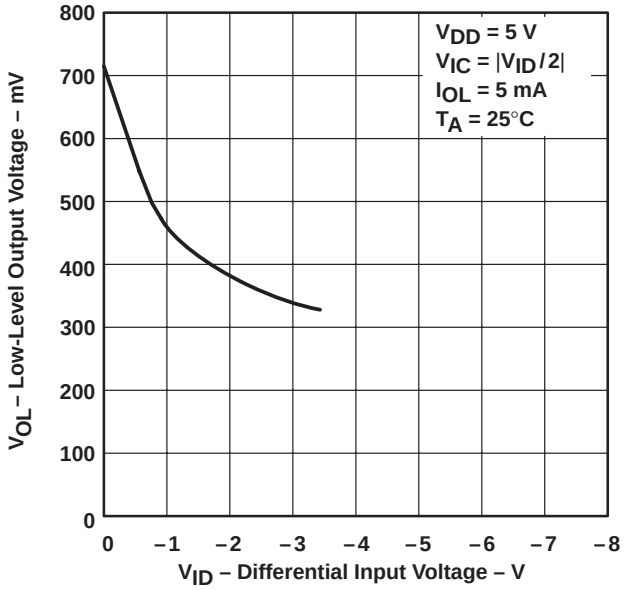

Figure 17

LOW-LEVEL OUTPUT VOLTAGE vs LOW-LEVEL OUTPUT CURRENT

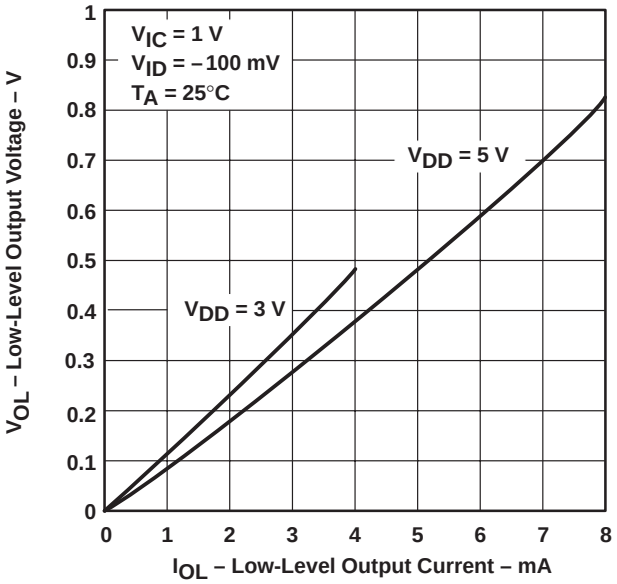

Figure 18

LARGE-SIGNAL DIFFERENTIAL VOLTAGE AMPLIFICATION vs SUPPLY VOLTAGE

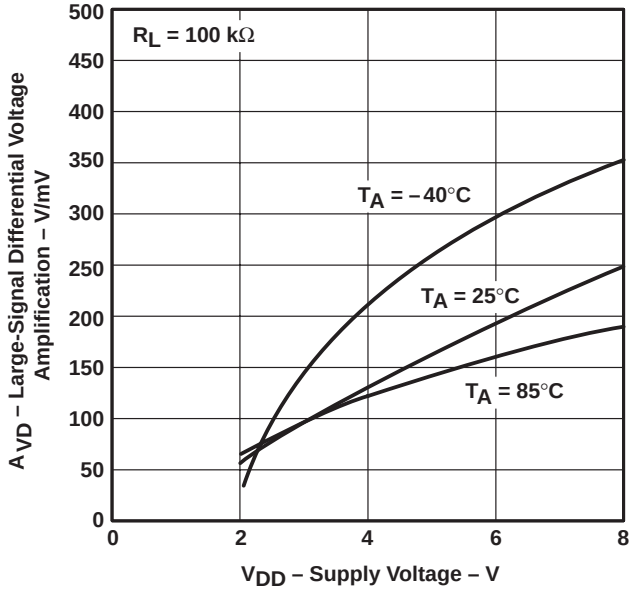

Figure 19

LARGE-SIGNAL DIFFERENTIAL VOLTAGE AMPLIFICATION vs FREE-AIR TEMPERATURE

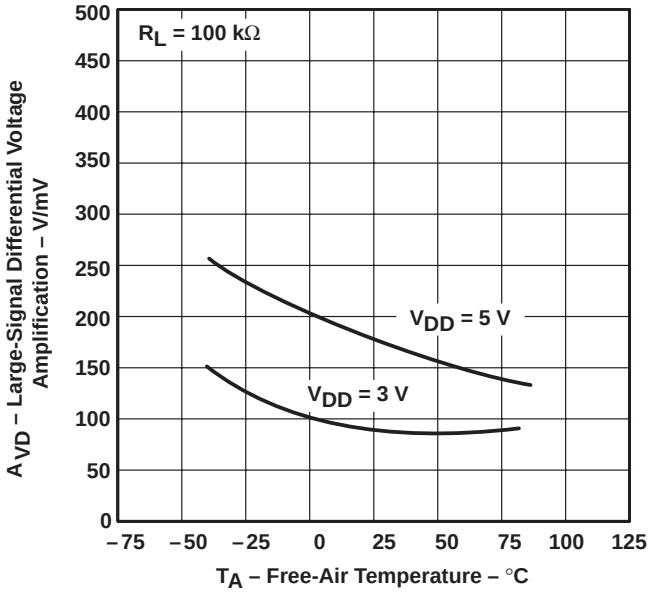

Figure 20

www.BDTIC.com/TI

TYPICAL CHARACTERISTICS

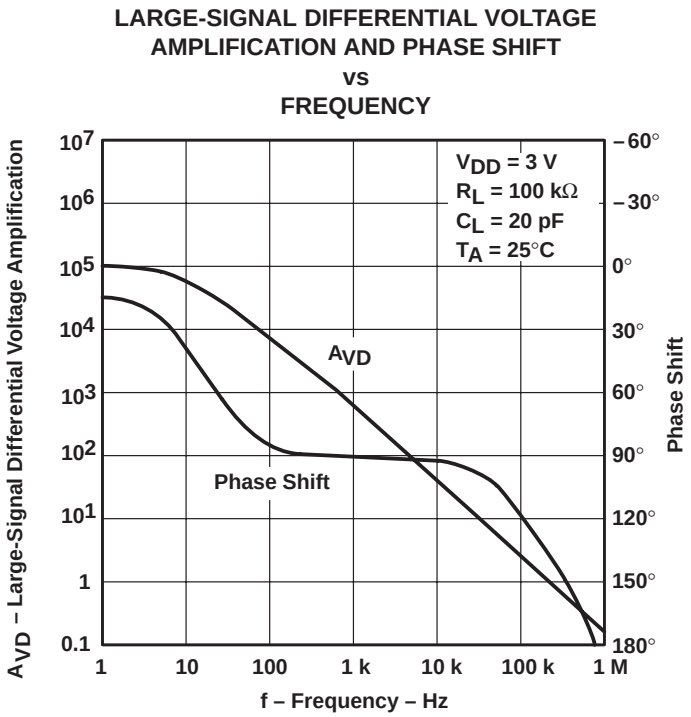

Figure 21

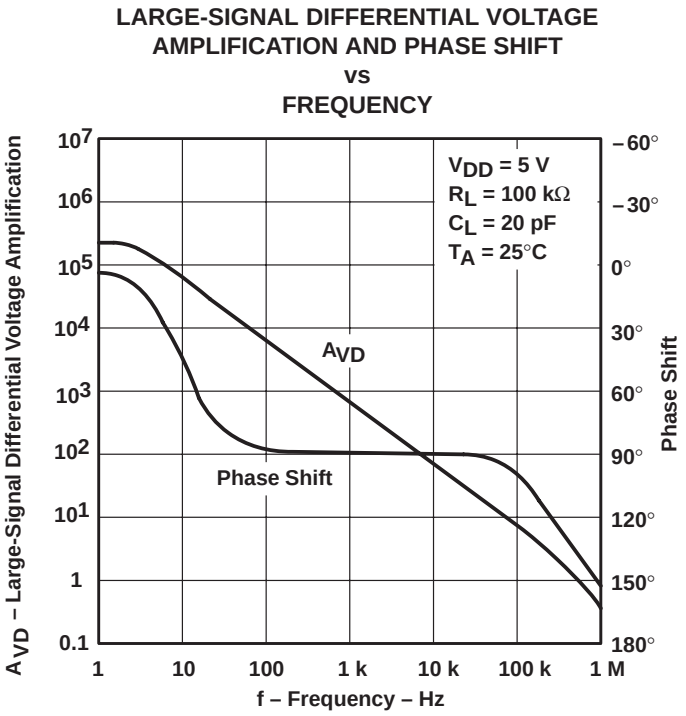

Figure 22

TEXAS INSTRUMENTS
POST OFFICE BOX 655303 • DALLAS, TEXAS 75265
www.BDTIC.com/TI

TYPICAL CHARACTERISTICS

SUPPLY CURRENT vs SUPPLY VOLTAGE

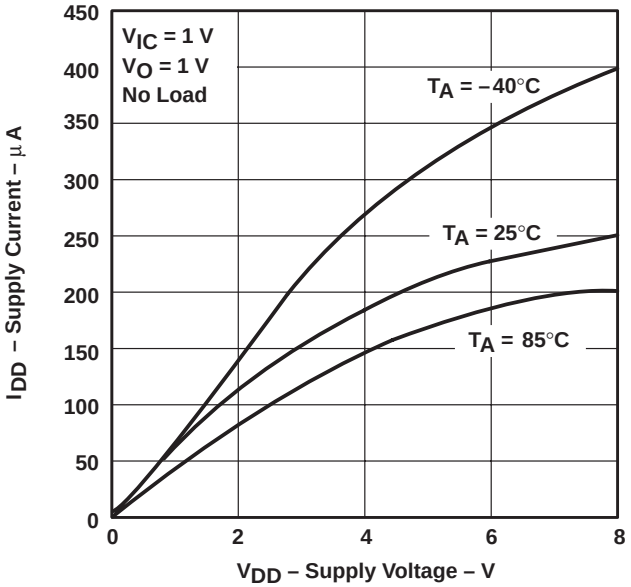

Figure 23

SUPPLY CURRENT vs FREE-AIR TEMPERATURE

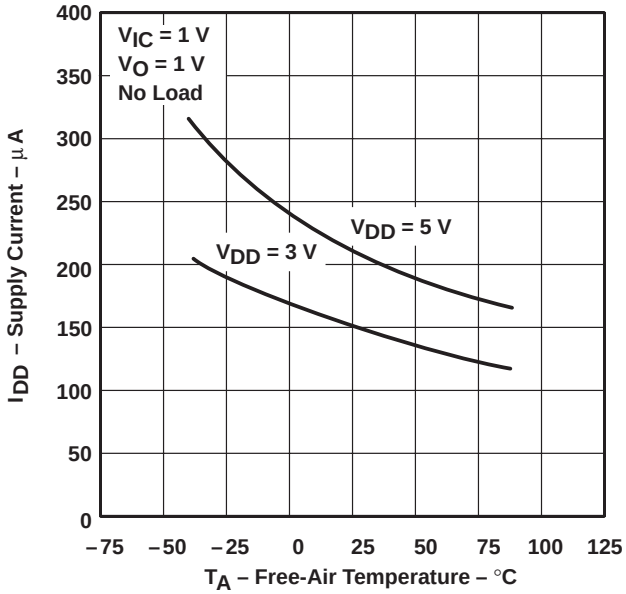

Figure 24

SLEW RATE vs SUPPLY VOLTAGE

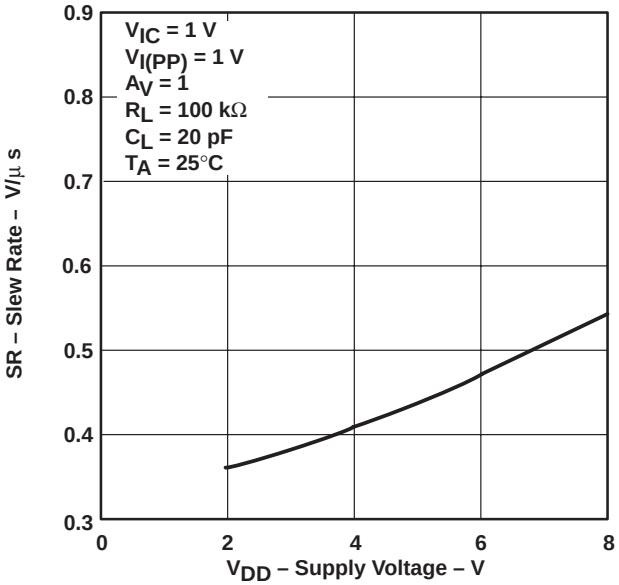

Figure 25

SLEW RATE vs FREE-AIR TEMPERATURE

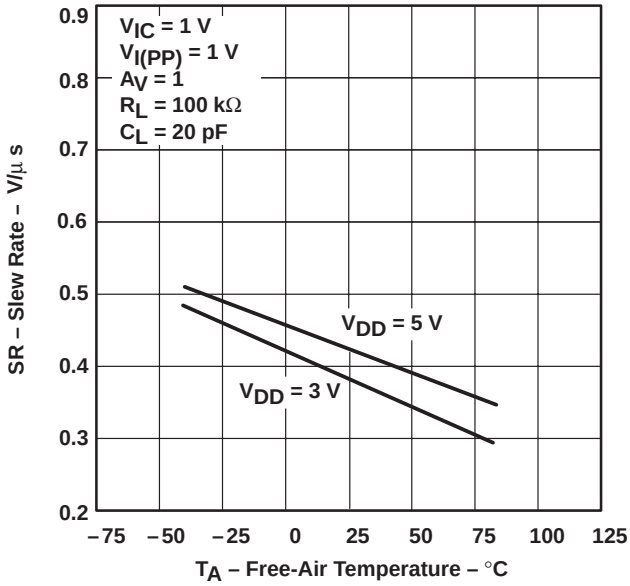

Figure 26

www.BDTIC.com/TI

TYPICAL CHARACTERISTICS

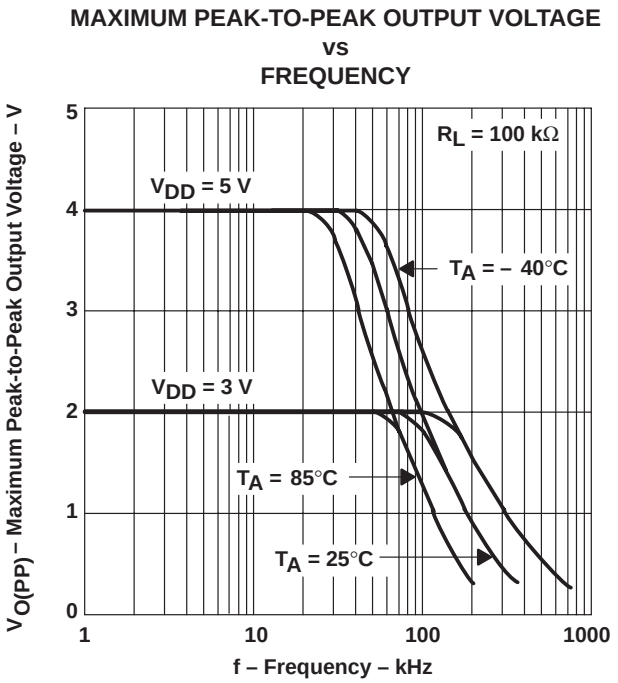

Figure 27

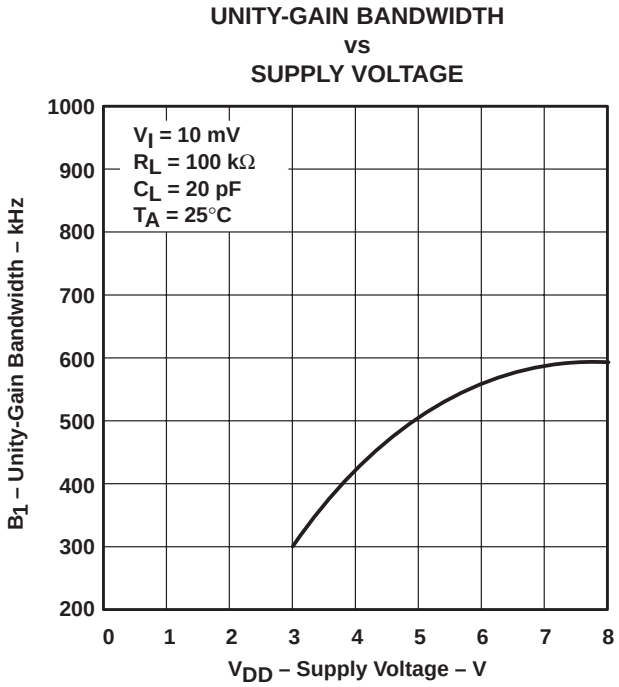

Figure 28

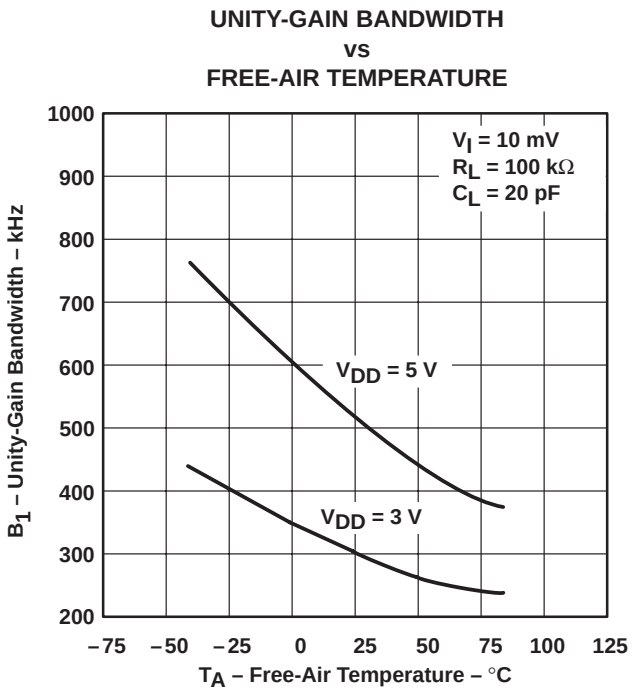

Figure 29

www.BDTIC.com/TI

TYPICAL CHARACTERISTICS

PHASE MARGIN vs SUPPLY VOLTAGE

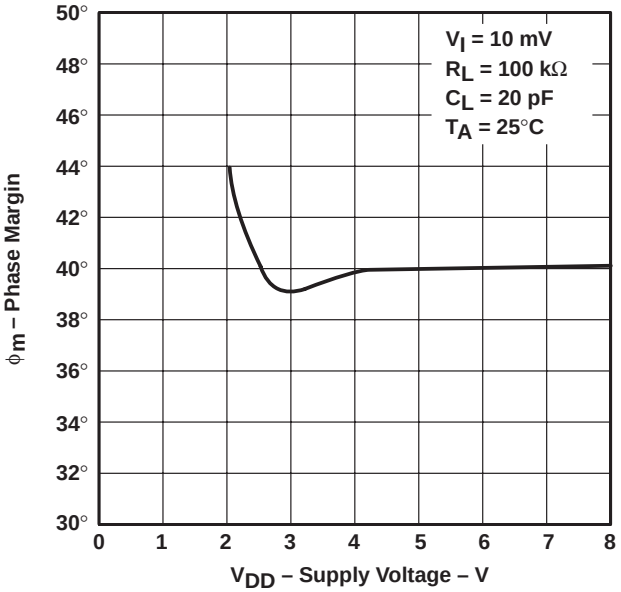

Figure 30

PHASE MARGIN vs FREE-AIR TEMPERATURE

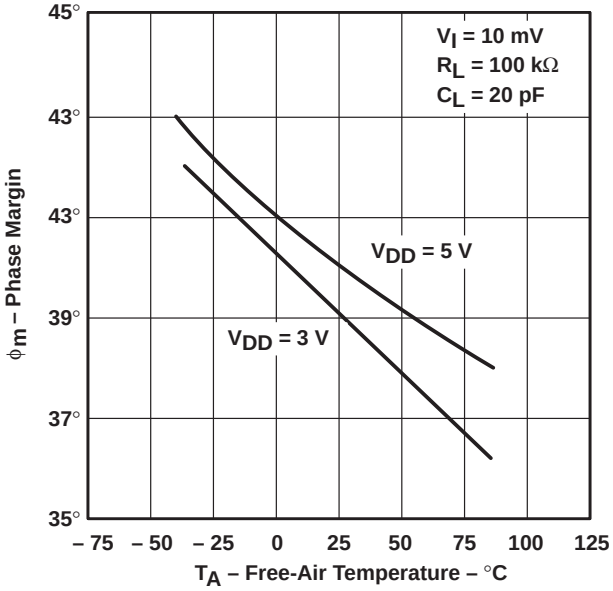

Figure 31

PHASE MARGIN vs LOAD CAPACITANCE

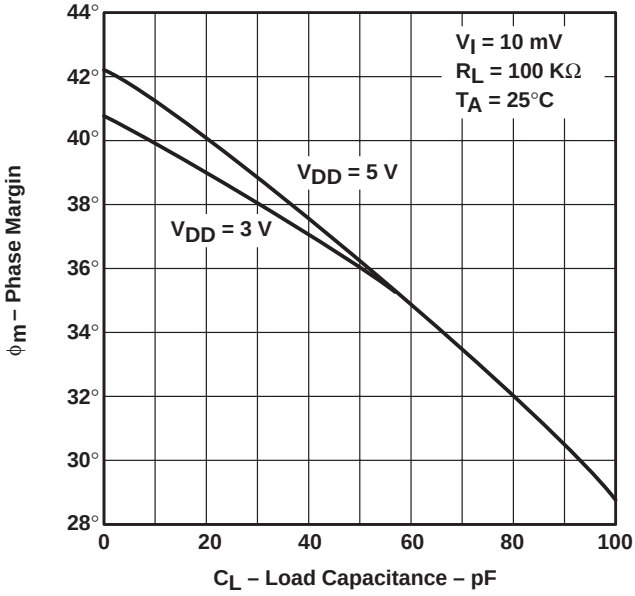

Figure 32

EQUIVALENT INPUT NOISE VOLTAGE vs FREQUENCY

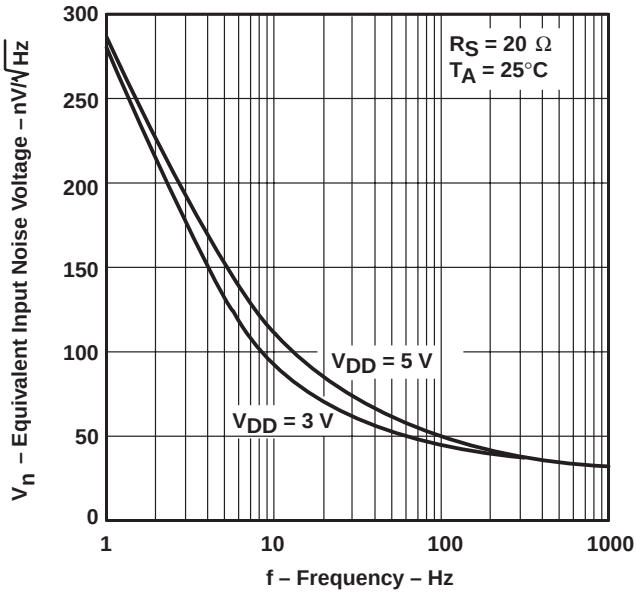

Figure 33

www.BDTIC.com/TI

PARAMETER MEASUREMENT INFORMATION

single-supply versus split-supply test circuits

Because the TLV233x is optimized for single-supply operation, circuit configurations used for the various tests often present some inconvenience since the input signal, in many cases, must be offset from ground. This inconvenience can be avoided by testing the device with split supplies and the output load tied to the negative rail. A comparison of single-supply versus split-supply test circuits is shown below. The use of either circuit gives the same result.

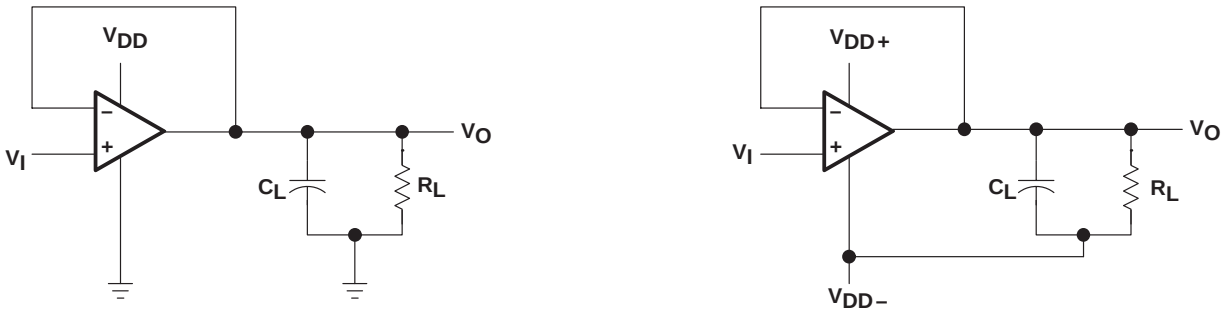

(a) SINGLE SUPPLY (b) SPLIT SUPPLY

Figure 34. Unity-Gain Amplifier

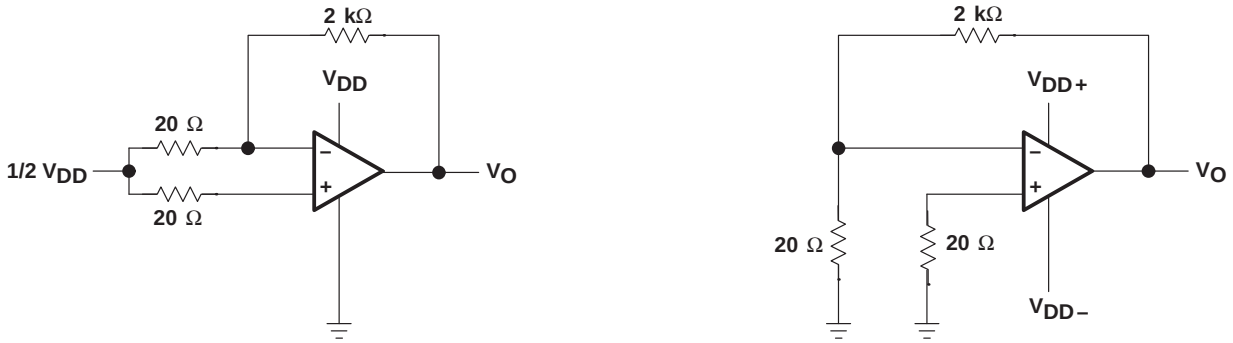

(a) SINGLE SUPPLY (b) SPLIT SUPPLY

Figure 35. Noise-Test Circuit

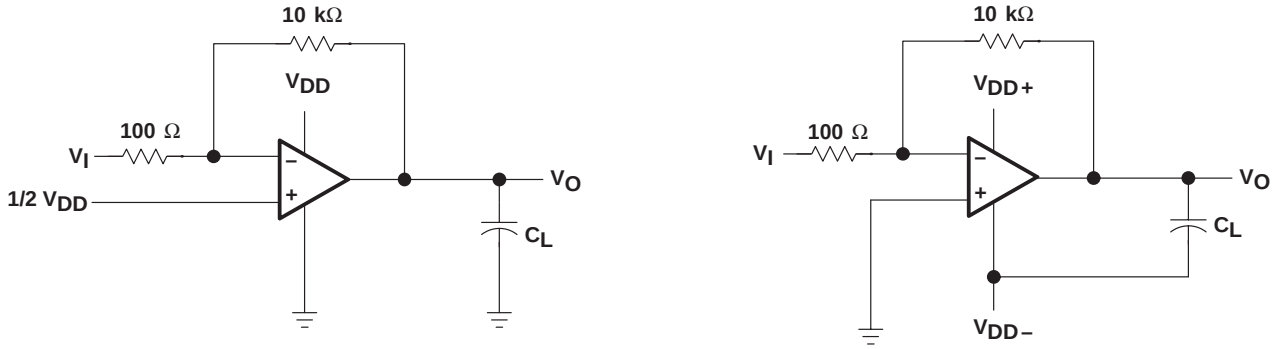

(a) SINGLE SUPPLY (b) SPLIT SUPPLY

Figure 36. Gain-of-100 Inverting Amplifier

TEXAS INSTRUMENTS
POST OFFICE BOX 655303 • DALLAS, TEXAS 75265
www.BDTIC.com/TI

PARAMETER MEASUREMENT INFORMATION

input bias current

Because of the high input impedance of the TLV233x operational amplifier, attempts to measure the input bias current can result in erroneous readings. The bias current at normal ambient temperature is typically less than 1 pA, a value that is easily exceeded by leakages on the test socket. Two suggestions are offered to avoid erroneous measurements:

- Isolate the device from other potential leakage sources. Use a grounded shield around and between the device inputs (see Figure 37). Leakages that would otherwise flow to the inputs are shunted away.
- Compensate for the leakage of the test socket by actually performing an input bias current test (using a picoammeter) with no device in the test socket. The actual input bias current can then be calculated by subtracting the open-socket leakage readings from the readings obtained with a device in the test socket.

  Many automatic testers as well as some bench-top operational amplifier testers use the servo-loop technique with a resistor in series with the device input to measure the input bias current (the voltage drop across the series resistor is measured and the bias current is calculated). This method requires that a device be inserted into a test socket to obtain a correct reading; therefore, an open-socket reading is not feasible using this method.

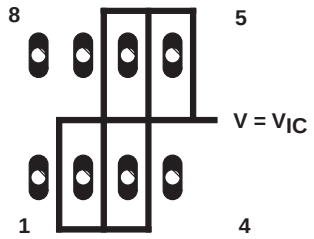

Figure 37. Isolation Metal Around Device Inputs (P package)

low-level output voltage

To obtain low-level supply-voltage operation, some compromise is necessary in the input stage. This compromise results in the device low-level output voltage being dependent on both the common-mode input voltage level as well as the differential input voltage level. When attempting to correlate low-level output readings with those quoted in the electrical specifications, these two conditions should be observed. If conditions other than these are to be used, please refer to the Typical Characteristics section of this data sheet.

input offset voltage temperature coefficient

Erroneous readings often result from attempts to measure temperature coefficient of input offset voltage. This parameter is actually a calculation using input offset voltage measurements obtained at two different temperatures. When one (or both) of the temperatures is below freezing, moisture can collect on both the device and the test socket. This moisture results in leakage and contact resistance which can cause erroneous input offset voltage readings. The isolation techniques previously mentioned have no effect on the leakage since the moisture also covers the isolation metal itself, thereby rendering it useless. These measurements should be performed at temperatures above freezing to minimize error.

full-power response

Full-power response, the frequency above which the operational amplifier slew rate limits the output voltage swing, is often specified two ways: full-linear response and full-peak response. The full-linear response is

www.BDTIC.com/TI

PARAMETER MEASUREMENT INFORMATION

generally measured by monitoring the distortion level of the output while increasing the frequency of a sinusoidal input signal until the maximum frequency is found above which the output contains significant distortion. The full-peak response is defined as the maximum output frequency, without regard to distortion, above which full peak-to-peak output swing cannot be maintained.

Because there is no industry-wide accepted value for significant distortion, the full-peak response is specified in this data sheet and is measured using the circuit of Figure 34. The initial setup involves the use of a sinusoidal input to determine the maximum peak-to-peak output of the device (the amplitude of the sinusoidal wave is increased until clipping occurs). The sinusoidal wave is then replaced with a square wave of the same amplitude. The frequency is then increased until the maximum peak-to-peak output can no longer be maintained (Figure 38). A square wave is used to allow a more accurate determination of the point at which the maximum peak-to-peak output is reached.

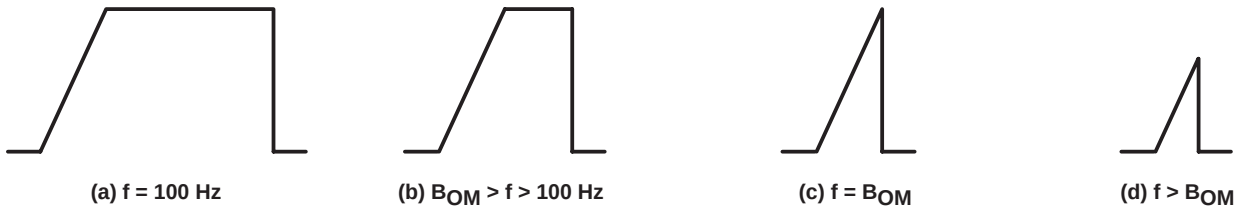

Figure 38. Full-Power-Response Output Signal

test time

Inadequate test time is a frequent problem, especially when testing CMOS devices in a high-volume, short-test-time environment. Internal capacitances are inherently higher in CMOS than in bipolar and BiFET devices and require longer test times than their bipolar and BiFET counterparts. The problem becomes more pronounced with reduced supply levels and lower temperatures.

APPLICATION INFORMATION

single-supply operation

While the TLV233x performs well using dual-power supplies (also called balanced or split supplies), the design is optimized for single-supply operation. This includes an input common-mode voltage range that encompasses ground as well as an output voltage range that pulls down to ground. The supply voltage range extends down to 2 V, thus allowing operation with supply levels commonly available for TTL and HCMOS.

Many single-supply applications require that a voltage be applied to one input to establish a reference level that is above ground. This virtual ground can be generated using two large resistors, but a preferred technique is to use a virtual-ground generator such as the TLE2426 (see Figure 39).

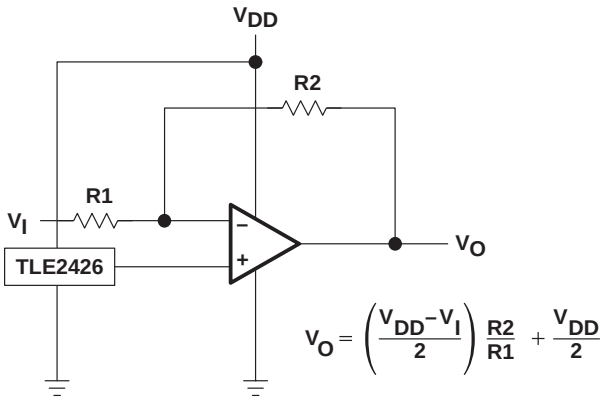

Figure 39. Inverting Amplifier With Voltage Reference

www.BDTIC.com/TI

APPLICATION INFORMATION

single-supply operation (continued)

The TLE2426 supplies an accurate voltage equal to $V_{DD}/2$, while consuming very little power and is suitable for supply voltages of greater than 4 V. The TLV233x works well in conjunction with digital logic; however, when powering both linear devices and digital logic from the same power supply, the following precautions are recommended:

- Power the linear devices from separate bypassed supply lines (see Figure 40); otherwise, the linear device supply rails can fluctuate due to voltage drops caused by high switching currents in the digital logic.
- Use proper bypass techniques to reduce the probability of noise-induced errors. Single capacitive decoupling is often adequate; however, RC decoupling may be necessary in high-frequency applications.

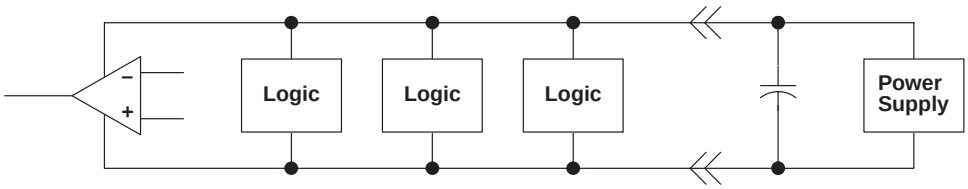

(a) COMMON-SUPPLY RAILS

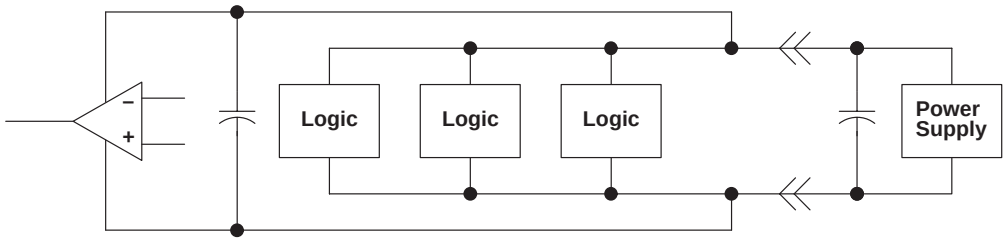

(b) SEPARATE-BYPASSED SUPPLY RAILS (preferred)

Figure 40. Common Versus Separate Supply Rails

input characteristics

The TLV233x is specified with a minimum and a maximum input voltage that, if exceeded at either input, could cause the device to malfunction. Exceeding this specified range is a common problem, especially in single-supply operation. The lower the range limit includes the negative rail, while the upper range limit is specified at V_{DD} – 1 V at T_A = 25°C and at V_{DD} – 1.2 V at all other temperatures.

The use of the polysilicon-gate process and the careful input circuit design gives the TLV233x very good input offset voltage drift characteristics relative to conventional metal-gate processes. Offset voltage drift in CMOS devices is highly influenced by threshold voltage shifts caused by polarization of the phosphorus dopant implanted in the oxide. Placing the phosphorus dopant in a conductor (such as a polysilicon gate) alleviates the polarization problem, thus reducing threshold voltage shifts by more than an order of magnitude. The offset voltage drift with time has been calculated to be typically 0.1 µV/month, including the first month of operation.

Because of the extremely high input impedance and resulting low bias-current requirements, the TLV233x is well suited for low-level signal processing; however, leakage currents on printed-circuit boards and sockets can easily exceed bias-current requirements and cause a degradation in device performance.

www.BDTIC.com/TI

APPLICATION INFORMATION

input characteristics (continued)

It is good practice to include guard rings around inputs (similar to those of Figure 37 in the Parameter Measurement Information section). These guards should be driven from a low-impedance source at the same voltage level as the common-mode input (see Figure 41).

The inputs of any unused amplifiers should be tied to ground to avoid possible oscillation.

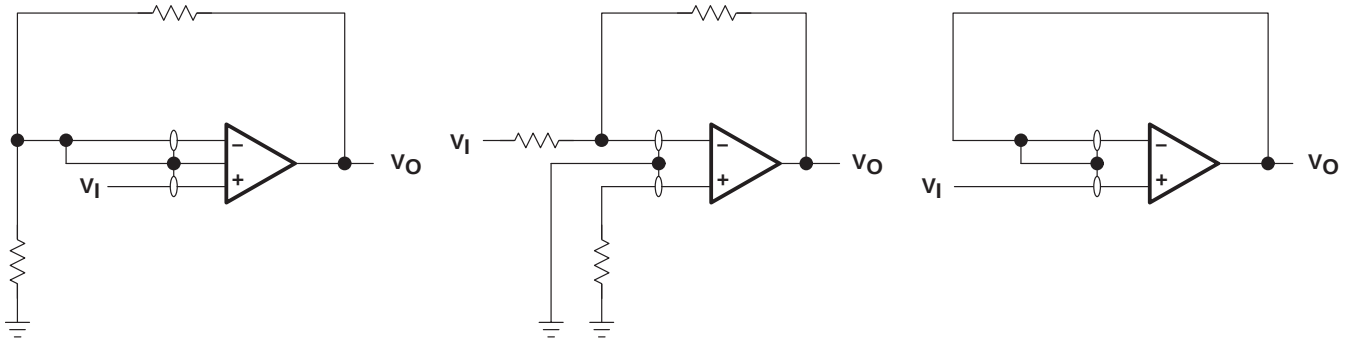

(a) NONINVERTING AMPLIFIER (b) INVERTING AMPLIFIER (c) UNITY-GAIN AMPLIFIER

Figure 41. Guard-Ring Schemes

noise performance

The noise specifications in operational amplifiers circuits are greatly dependent on the current in the first-stage differential amplifier. The low input bias-current requirements of the TLV233x results in a very low noise current, which is insignificant in most applications. This feature makes the device especially favorable over bipolar devices when using values of circuit impedance greater than 50 kΩ, since bipolar devices exhibit greater noise currents.

feedback

Operational amplifiers circuits nearly always employ feedback, and since feedback is the first prerequisite for oscillation, caution is appropriate. Most oscillation problems result from driving capacitive loads and ignoring stray input capacitance. A small-value capacitor connected in parallel with the feedback resistor is an effective remedy (see Figure 42). The value of this capacitor is optimized empirically.

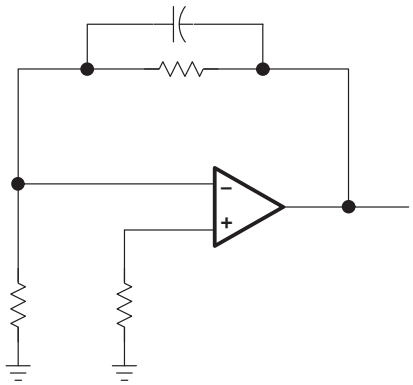

Figure 42. Compensation for Input Capacitance

electrostatic-discharge protection

The TLV233x incorporates an internal electrostatic-discharge (ESD)-protection circuit that prevents functional failures at voltages up to 2000 V as tested under MIL-PRF-38535. Method 3015.2. Care should be exercised, however, when handling these devices as exposure to ESD may result in the degradation of the device parametric performance. The protection circuit also causes the input bias currents to be temperature dependent and have the characteristics of a reverse-biased diode.

www.BDTIC.com/TI

APPLICATION INFORMATION

latch-up

Because CMOS devices are susceptible to latch-up due to their inherent parasitic thyristors, the TLV233x inputs and outputs are designed to withstand –100-mA surge currents without sustaining latch-up; however, techniques should be used to reduce the chance of latch-up whenever possible. Internal-protection diodes should not by design be forward biased. Applied input and output voltage should not exceed the supply voltage by more than 300 mV. Care should be exercised when using capacitive coupling on pulse generators. Supply transients should be shunted by the use of decoupling capacitors (0.1 µF typical) located across the supply rails as close to the device as possible.

The current path established if latch-up occurs is usually between the positive supply rail and ground and can be triggered by surges on the supply lines and/or voltages on either the output or inputs that exceed the supply voltage. Once latch-up occurs, the current flow is limited only by the impedance of the power supply and the forward resistance of the parasitic thyristor and usually results in the destruction of the device. The chance of latch-up occurring increases with increasing temperature and supply voltages.

output characteristics

The output stage of the TLV233x is designed to sink and source relatively high amounts of current (see Typical Characteristics). If the output is subjected to a short-circuit condition, this high-current capability can cause device damage under certain conditions. Output current capability increases with supply voltage.

Although the TLV233x possesses excellent high-level output voltage and current capability, methods are available for boosting this capability if needed. The simplest method involves the use of a pullup resistor (R_P) connected from the output to the positive supply rail (see Figure 43). There are two disadvantages to the use of this circuit. First, the NMOS pulldown transistor N4 (see equivalent schematic) must sink a comparatively large amount of current. In this circuit, N4 behaves like a linear resistor with an on resistance between approximately 60 Ω and 180 Ω, depending on how hard the operational amplifier input is driven. With very low values of R_P, a voltage offset from 0 V at the output occurs. Secondly, pullup resistor R_P acts as a drain load to N4 and the gain of the operational amplifier is reduced at output voltage levels where N5 is not supplying the output current.

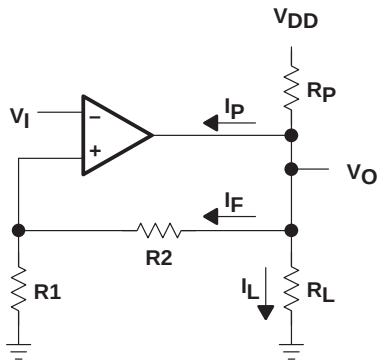

$$R_P = \frac{V_{DD} - V_O}{I_F + I_L + I_P}$$

I_P = Pullup Current Required by the Operational Amplifier (typically 500 µA)

Figure 43. Resistive Pullup to Increase V_{OH}

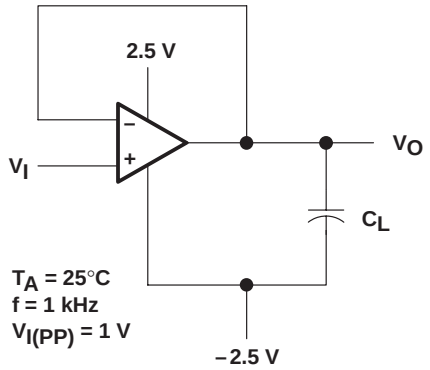

Figure 44. Test Circuit for Output Characteristics

All operating characteristics of the TLV233x are measured using a 20-pF load. The device drives higher capacitive loads; however, as output load capacitance increases, the resulting response pole occurs at lower frequencies thereby causing ringing, peaking, or even oscillation (see Figure 44 and Figure 45). In many cases, adding some compensation in the form of a series resistor in the feedback loop alleviates the problem.

www.BDTIC.com/TI

APPLICATION INFORMATION

output characteristics (continued)

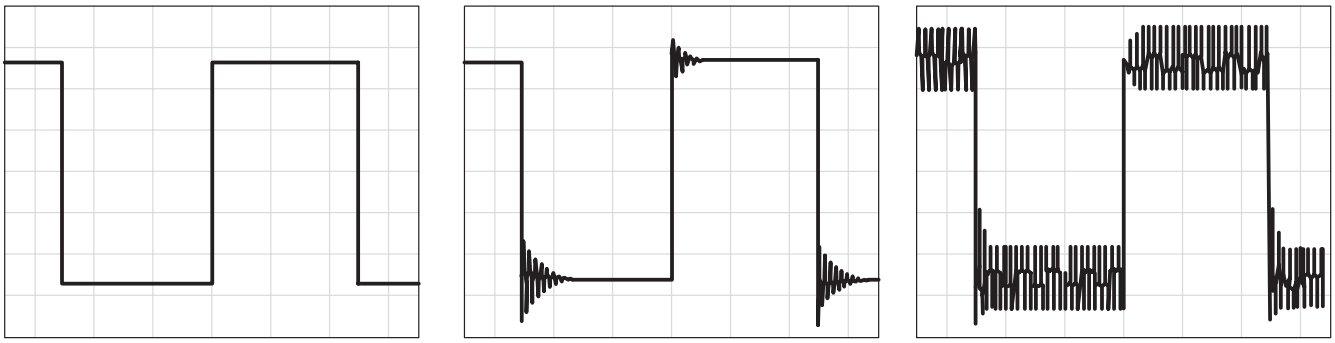

(a) C_L = 20 pF, R_L = NO LOAD (b) C_L = 170 pF, R_L = NO LOAD (c) C_L = 190 pF, R_L = NO LOAD

Figure 45. Effect of Capacitive Loads

www.BDTIC.com/TI

PACKAGING INFORMATION

Orderable Device	Status [1]	Package Type	Package Drawing	Pins	Package Qty	Eco Plan [2]	Lead/Ball Finish	MSL Peak Temp [3]
TLV2332ID	ACTIVE	SOIC	D	8	75	Green (RoHS & no Sb/Br)	CU NIPDAU	Level-1-260C-UNLIM
TLV2332IDG4	ACTIVE	SOIC	D	8	75	Green (RoHS & no Sb/Br)	CU NIPDAU	Level-1-260C-UNLIM
TLV2332IDR	ACTIVE	SOIC	D	8	2500	Green (RoHS & no Sb/Br)	CU NIPDAU	Level-1-260C-UNLIM
TLV2332IDRG4	ACTIVE	SOIC	D	8	2500	Green (RoHS & no Sb/Br)	CU NIPDAU	Level-1-260C-UNLIM
TLV2332IP	ACTIVE	PDIP	P	8	50	Pb-Free (RoHS)	CU NIPDAU	N / A for Pkg Type
TLV2332IPE4	ACTIVE	PDIP	P	8	50	Pb-Free (RoHS)	CU NIPDAU	N / A for Pkg Type
TLV2332IPWLE	OBSOLETE	TSSOP	PW	8		TBD	Call TI	Call TI
TLV2332IPWR	ACTIVE	TSSOP	PW	8	2000	Green (RoHS & no Sb/Br)	CU NIPDAU	Level-1-260C-UNLIM
TLV2332IPWRG4	ACTIVE	TSSOP	PW	8	2000	Green (RoHS & no Sb/Br)	CU NIPDAU	Level-1-260C-UNLIM
TLV2334ID	ACTIVE	SOIC	D	14	50	Green (RoHS & no Sb/Br)	CU NIPDAU	Level-1-260C-UNLIM
TLV2334IDG4	ACTIVE	SOIC	D	14	50	Green (RoHS & no Sb/Br)	CU NIPDAU	Level-1-260C-UNLIM
TLV2334IN	ACTIVE	PDIP	N	14	25	Pb-Free (RoHS)	CU NIPDAU	N / A for Pkg Type
TLV2334INE4	ACTIVE	PDIP	N	14	25	Pb-Free (RoHS)	CU NIPDAU	N / A for Pkg Type
TLV2334IPWLE	OBSOLETE	TSSOP	PW	14		TBD	Call TI	Call TI
TLV2334IPWR	ACTIVE	TSSOP	PW	14	2000	Green (RoHS & no Sb/Br)	CU NIPDAU	Level-1-260C-UNLIM
TLV2334IPWRG4	ACTIVE	TSSOP	PW	14	2000	Green (RoHS & no Sb/Br)	CU NIPDAU	Level-1-260C-UNLIM

[1] The marketing status values are defined as follows:
ACTIVE: Product device recommended for new designs.
LIFEBUY: TI has announced that the device will be discontinued, and a lifetime-buy period is in effect.
NRND: Not recommended for new designs. Device is in production to support existing customers, but TI does not recommend using this part in a new design.
PREVIEW: Device has been announced but is not in production. Samples may or may not be available.
OBSOLETE: TI has discontinued the production of the device.

[2] Eco Plan - The planned eco-friendly classification: Pb-Free (RoHS), Pb-Free (RoHS Exempt), or Green (RoHS & no Sb/Br) - please check http://www.ti.com/productcontent for the latest availability information and additional product content details.
TBD: The Pb-Free/Green conversion plan has not been defined.
Pb-Free (RoHS): TI's terms "Lead-Free" or "Pb-Free" mean semiconductor products that are compatible with the current RoHS requirements for all 6 substances, including the requirement that lead not exceed 0.1% by weight in homogeneous materials. Where designed to be soldered at high temperatures, TI Pb-Free products are suitable for use in specified lead-free processes.
Pb-Free (RoHS Exempt): This component has a RoHS exemption for either 1) lead-based flip-chip solder bumps used between the die and package, or 2) lead-based die adhesive used between the die and leadframe. The component is otherwise considered Pb-Free (RoHS compatible) as defined above.
Green (RoHS & no Sb/Br): TI defines "Green" to mean Pb-Free (RoHS compatible), and free of Bromine (Br) and Antimony (Sb) based flame retardants (Br or Sb do not exceed 0.1% by weight in homogeneous material)

[3] MSL, Peak Temp. -- The Moisture Sensitivity Level rating according to the JEDEC industry standard classifications, and peak solder temperature.

www.BDTIC.com/TI

Important Information and Disclaimer: The information provided on this page represents TI's knowledge and belief as of the date that it is provided. TI bases its knowledge and belief on information provided by third parties, and makes no representation or warranty as to the accuracy of such information. Efforts are underway to better integrate information from third parties. TI has taken and continues to take reasonable steps to provide representative and accurate information but may not have conducted destructive testing or chemical analysis on incoming materials and chemicals. TI and TI suppliers consider certain information to be proprietary, and thus CAS numbers and other limited information may not be available for release.

In no event shall TI's liability arising out of such information exceed the total purchase price of the TI part(s) at issue in this document sold by TI to Customer on an annual basis.

www.BDTIC.com/TI

TAPE AND REEL INFORMATION

REEL DIMENSIONS

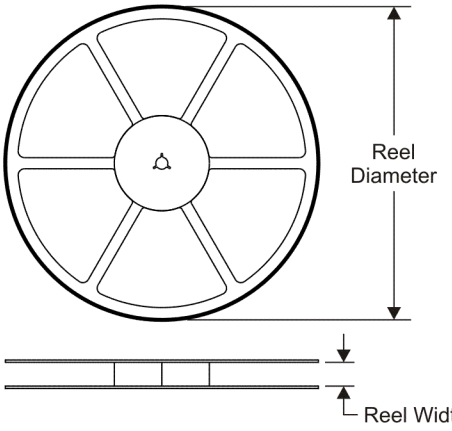

TAPE DIMENSIONS

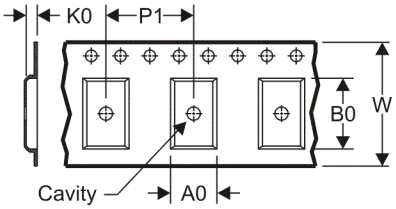

A0	Dimension designed to accommodate the component width
B0	Dimension designed to accommodate the component length
K0	Dimension designed to accommodate the component thickness
W	Overall width of the carrier tape
P1	Pitch between successive cavity centers

QUADRANT ASSIGNMENTS FOR PIN 1 ORIENTATION IN TAPE

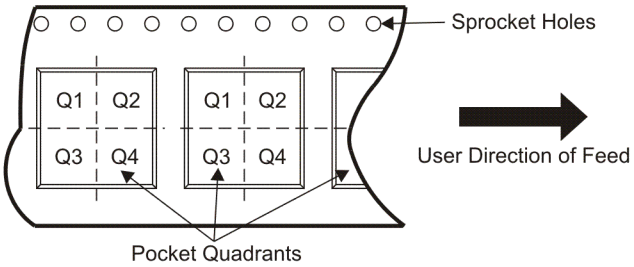

*All dimensions are nominal

Device	Package Type	Package Drawing	Pins	SPQ	Reel Diameter (mm)	Reel Width W1 (mm)	A0 (mm)	B0 (mm)	K0 (mm)	P1 (mm)	W (mm)	Pin1 Quadrant
TLV2332IDR	SOIC	D	8	2500	330.0	12.4	6.4	5.2	2.1	8.0	12.0	Q1
TLV2332IPWR	TSSOP	PW	8	2000	330.0	12.4	7.0	3.6	1.6	8.0	12.0	Q1
TLV2334IPWR	TSSOP	PW	14	2000	330.0	12.4	6.9	5.6	1.6	8.0	12.0	Q1

www.BDTIC.com/TI

TAPE AND REEL BOX DIMENSIONS

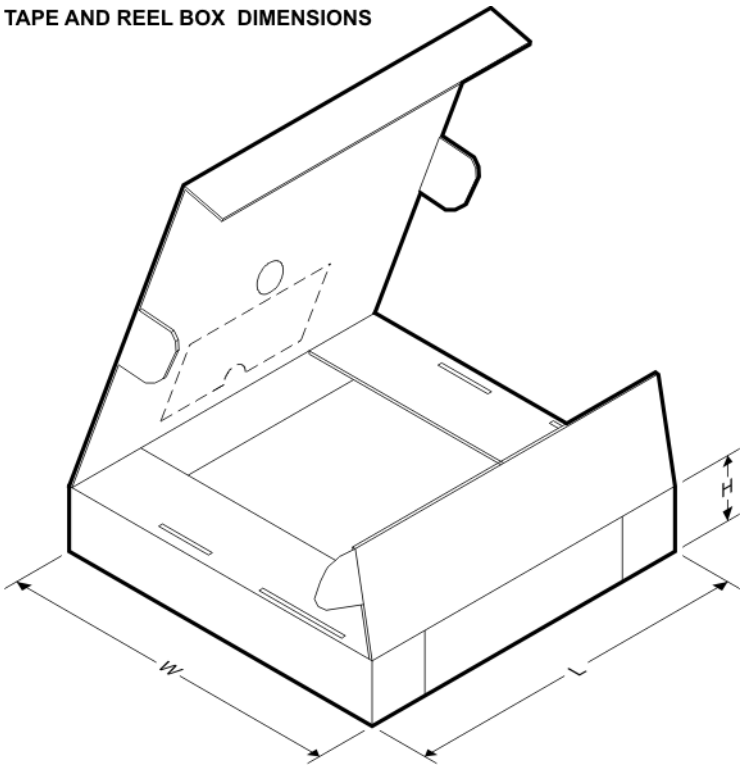

*All dimensions are nominal

Device	Package Type	Package Drawing	Pins	SPQ	Length (mm)	Width (mm)	Height (mm)
TLV2332IDR	SOIC	D	8	2500	340.5	338.1	20.6
TLV2332IPWR	TSSOP	PW	8	2000	346.0	346.0	29.0
TLV2334IPWR	TSSOP	PW	14	2000	346.0	346.0	29.0

www.BDTIC.com/TI

IMPORTANT NOTICE

Texas Instruments Incorporated and its subsidiaries (TI) reserve the right to make corrections, modifications, enhancements, improvements, and other changes to its products and services at any time and to discontinue any product or service without notice. Customers should obtain the latest relevant information before placing orders and should verify that such information is current and complete. All products are sold subject to TI's terms and conditions of sale supplied at the time of order acknowledgment.

TI warrants performance of its hardware products to the specifications applicable at the time of sale in accordance with TI's standard warranty. Testing and other quality control techniques are used to the extent TI deems necessary to support this warranty. Except where mandated by government requirements, testing of all parameters of each product is not necessarily performed.

TI assumes no liability for applications assistance or customer product design. Customers are responsible for their products and applications using TI components. To minimize the risks associated with customer products and applications, customers should provide adequate design and operating safeguards.

TI does not warrant or represent that any license, either express or implied, is granted under any TI patent right, copyright, mask work right, or other TI intellectual property right relating to any combination, machine, or process in which TI products or services are used. Information published by TI regarding third-party products or services does not constitute a license from TI to use such products or services or a warranty or endorsement thereof. Use of such information may require a license from a third party under the patents or other intellectual property of the third party, or a license from TI under the patents or other intellectual property of TI.

Reproduction of TI information in TI data books or data sheets is permissible only if reproduction is without alteration and is accompanied by all associated warranties, conditions, limitations, and notices. Reproduction of this information with alteration is an unfair and deceptive business practice. TI is not responsible or liable for such altered documentation. Information of third parties may be subject to additional restrictions.

Resale of TI products or services with statements different from or beyond the parameters stated by TI for that product or service voids all express and any implied warranties for the associated TI product or service and is an unfair and deceptive business practice. TI is not responsible or liable for any such statements.

TI products are not authorized for use in safety-critical applications (such as life support) where a failure of the TI product would reasonably be expected to cause severe personal injury or death, unless officers of the parties have executed an agreement specifically governing such use. Buyers represent that they have all necessary expertise in the safety and regulatory ramifications of their applications, and acknowledge and agree that they are solely responsible for all legal, regulatory and safety-related requirements concerning their products and any use of TI products in such safety-critical applications, notwithstanding any applications-related information or support that may be provided by TI. Further, Buyers must fully indemnify TI and its representatives against any damages arising out of the use of TI products in such safety-critical applications.

TI products are neither designed nor intended for use in military/aerospace applications or environments unless the TI products are specifically designated by TI as military-grade or "enhanced plastic." Only products designated by TI as military-grade meet military specifications. Buyers acknowledge and agree that any such use of TI products which TI has not designated as military-grade is solely at the Buyer's risk, and that they are solely responsible for compliance with all legal and regulatory requirements in connection with such use.

TI products are neither designed nor intended for use in automotive applications or environments unless the specific TI products are designated by TI as compliant with ISO/TS 16949 requirements. Buyers acknowledge and agree that, if they use any non-designated products in automotive applications, TI will not be responsible for any failure to meet such requirements.

Following are URLs where you can obtain information on other Texas Instruments products and application solutions:

Products		**Applications**	
Amplifiers	amplifier.ti.com	Audio	www.ti.com/audio
Data Converters	dataconverter.ti.com	Automotive	www.ti.com/automotive
DLP® Products	www.dlp.com	Communications and Telecom	www.ti.com/communications
DSP	dsp.ti.com	Computers and Peripherals	www.ti.com/computers
Clocks and Timers	www.ti.com/clocks	Consumer Electronics	www.ti.com/consumer-apps
Interface	interface.ti.com	Energy	www.ti.com/energy
Logic	logic.ti.com	Industrial	www.ti.com/industrial
Power Mgmt	power.ti.com	Medical	www.ti.com/medical
Microcontrollers	microcontroller.ti.com	Security	www.ti.com/security
RFID	www.ti-rfid.com	Space, Avionics & Defense	www.ti.com/space-avionics-defense
RF/IF and ZigBee® Solutions	www.ti.com/lprf	Video and Imaging	www.ti.com/video
		Wireless	www.ti.com/wireless-apps

Mailing Address: Texas Instruments, Post Office Box 655303, Dallas, Texas 75265
Copyright © 2010, Texas Instruments Incorporated

www.BDTIC.com/TI