- **Operating Range of 2 V to 5.5 V**
- **Max t_{pd} of 6.5 ns at 5 V**
- **Low Power Consumption, 10-µA Max I_{CC}**
- **±8-mA Output Drive at 5 V**
- **Schmitt Trigger Action at All Inputs Makes the Circuit Tolerant for Slower Input Rise and Fall Time**
- **Latch-Up Performance Exceeds 250 mA Per JESD 17**

DBV PACKAGE (TOP VIEW)

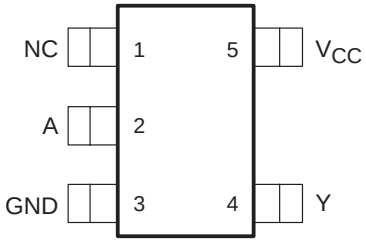

DCK PACKAGE (TOP VIEW)

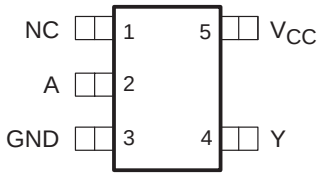

DRL PACKAGE (TOP VIEW)

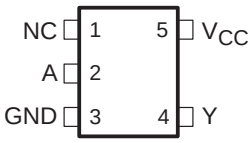

NC – No internal connection

See mechanical drawings for dimensions.

description/ordering information

The SN74AHC1G04 contains one inverter gate. The device performs the Boolean function $Y = \overline{A}$.

ORDERING INFORMATION

T_A	PACKAGE†		ORDERABLE PART NUMBER	TOP-SIDE MARKING‡
−40°C to 85°C	SOT (SOT-23) − DBV	Reel of 3000	SN74AHC1G04DBVR	A04_
		Reel of 250	SN74AHC1G04DBVT	
	SOT (SC-70) − DCK	Reel of 3000	SN74AHC1G04DCKR	AC_
		Reel of 250	SN74AHC1G04DCKT	
	SOT (SOT-553) – DRL	Reel of 4000	SN74AHC1G04DRLR	AC_

† Package drawings, standard packing quantities, thermal data, symbolization, and PCB design guidelines are available at www.ti.com/sc/package.

‡ The actual top-side marking has one additional character that designates the assembly/test site.

FUNCTION TABLE

INPUT A	OUTPUT Y
H	L
L	H

logic diagram (positive logic)

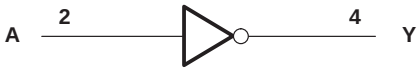

Please be aware that an important notice concerning availability, standard warranty, and use in critical applications of Texas Instruments semiconductor products and disclaimers thereto appears at the end of this data sheet.

PRODUCTION DATA information is current as of publication date. Products conform to specifications per the terms of Texas Instruments standard warranty. Production processing does not necessarily include testing of all parameters.

Copyright © 2005, Texas Instruments Incorporated

www.BDTIC.com/TI

absolute maximum ratings over operating free-air temperature range (unless otherwise noted)†

Supply voltage range, V_{CC}	−0.5 V to 7 V
Input voltage range, V_I (see Note 1)	−0.5 V to 7 V
Output voltage range, V_O (see Note 1)	−0.5 V to V_{CC} + 0.5 V
Input clamp current, I_{IK} (V_I < 0)	−20 mA
Output clamp current, I_{OK} (V_O < 0 or V_O > V_{CC})	±20 mA
Continuous output current, I_O (V_O = 0 to V_{CC})	±25 mA
Continuous current through V_{CC} or GND	±50 mA
Package thermal impedance, θ_{JA} (see Note 2): DBV package	206°C/W
DCK package	252°C/W
DRL package	142°C/W
Storage temperature range, T_{stg}	−65°C to 150°C

† Stresses beyond those listed under “absolute maximum ratings” may cause permanent damage to the device. These are stress ratings only, and functional operation of the device at these or any other conditions beyond those indicated under “recommended operating conditions” is not implied. Exposure to absolute-maximum-rated conditions for extended periods may affect device reliability.

NOTES: 1. The input and output voltage ratings may be exceeded if the input and output current ratings are observed.
2. The package thermal impedance is calculated in accordance with JESD 51-7.

recommended operating conditions (see Note 3)

			MIN	MAX	UNIT
V_{CC}	Supply voltage		2	5.5	V
V_{IH}	High-level input voltage	V_{CC} = 2 V	1.5		V
		V_{CC} = 3 V	2.1		
		V_{CC} = 5.5 V	3.85		
V_{IL}	Low-level input voltage	V_{CC} = 2 V		0.5	V
		V_{CC} = 3 V		0.9	
		V_{CC} = 5.5 V		1.65	
V_I	Input voltage		0	5.5	V
V_O	Output voltage		0	V_{CC}	V
I_{OH}	High-level output current	V_{CC} = 2 V		−50	μA
		V_{CC} = 3.3 V ± 0.3 V		−4	mA
		V_{CC} = 5 V ± 0.5 V		−8	
I_{OL}	Low-level output current	V_{CC} = 2 V		50	μA
		V_{CC} = 3.3 V ± 0.3 V		4	mA
		V_{CC} = 5 V ± 0.5 V		8	
Δt/Δv	Input transition rise or fall rate	V_{CC} = 3.3 V ± 0.3 V		100	ns/V
		V_{CC} = 5 V ± 0.5 V		20	
T_A	Operating free-air temperature		−40	85	°C

NOTE 3: All unused inputs of the device must be held at V_{CC} or GND to ensure proper device operation. Refer to the TI application report, *Implications of Slow or Floating CMOS Inputs*, literature number SCBA004.

www.BDTIC.com/TI

electrical characteristics over recommended operating free-air temperature range (unless otherwise noted)

PARAMETER	TEST CONDITIONS	V_{CC}	$T_A = 25°C$			MIN	MAX	UNIT
			MIN	TYP	MAX			
V_{OH}	$I_{OH} = -50\ \mu A$	2 V	1.9	2		1.9		V
		3 V	2.9	3		2.9		
		4.5 V	4.4	4.5		4.4		
	$I_{OH} = -4$ mA	3 V	2.58			2.48		
	$I_{OH} = -8$ mA	4.5 V	3.94			3.8		
V_{OL}	$I_{OL} = 50\ \mu A$	2 V			0.1		0.1	V
		3 V			0.1		0.1	
		4.5 V			0.1		0.1	
	$I_{OL} = 4$ mA	3 V			0.36		0.44	
	$I_{OL} = 8$ mA	4.5 V			0.36		0.44	
I_I	$V_I = 5.5$ V or GND	0 V to 5.5 V			±0.1		±1	μA
I_{CC}	$V_I = V_{CC}$ or GND, $I_O = 0$	5.5 V			1		10	μA
C_i	$V_I = V_{CC}$ or GND	5 V		2	10		10	pF

switching characteristics over recommended operating free-air temperature range, $V_{CC} = 3.3\ V \pm 0.3\ V$ (unless otherwise noted) (see Figure 1)

PARAMETER	FROM (INPUT)	TO (OUTPUT)	LOAD CAPACITANCE	$T_A = 25°C$			MIN	MAX	UNIT
				MIN	TYP	MAX			
t_{PLH}	A	Y	$C_L = 15$ pF		5	7.1	1	8.5	ns
t_{PHL}					5	7.1	1	8.5	
t_{PLH}	A	Y	$C_L = 50$ pF		7.5	10.6	1	12	ns
t_{PHL}					7.5	10.6	1	12	

switching characteristics over recommended operating free-air temperature range, $V_{CC} = 5\ V \pm 0.5\ V$ (unless otherwise noted) (see Figure 1)

PARAMETER	FROM (INPUT)	TO (OUTPUT)	LOAD CAPACITANCE	$T_A = 25°C$			MIN	MAX	UNIT
				MIN	TYP	MAX			
t_{PLH}	A	Y	$C_L = 15$ pF		3.8	5.5	1	6.5	ns
t_{PHL}					3.8	5.5	1	6.5	
t_{PLH}	A	Y	$C_L = 50$ pF		5.3	7.5	1	8.5	ns
t_{PHL}					5.3	7.5	1	8.5	

operating characteristics, $V_{CC} = 5\ V$, $T_A = 25°C$

PARAMETER		TEST CONDITIONS		TYP	UNIT
C_{pd}	Power dissipation capacitance	No load,	f = 1 MHz	12	pF

www.BDTIC.com/TI

PARAMETER MEASUREMENT INFORMATION

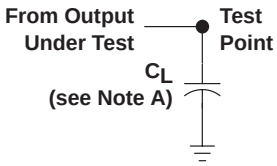

LOAD CIRCUIT FOR
TOTEM-POLE OUTPUTS

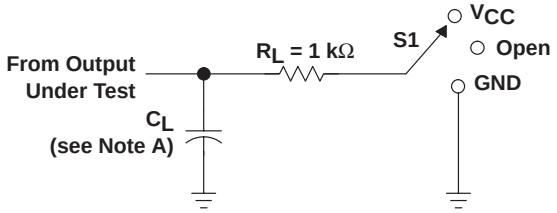

LOAD CIRCUIT FOR
3-STATE AND OPEN-DRAIN OUTPUTS

TEST	S1
t_{PLH}/t_{PHL}	Open
t_{PLZ}/t_{PZL}	V_{CC}
t_{PHZ}/t_{PZH}	GND
Open Drain	V_{CC}

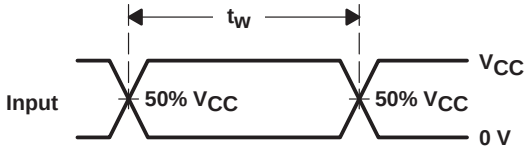

VOLTAGE WAVEFORMS
PULSE DURATION

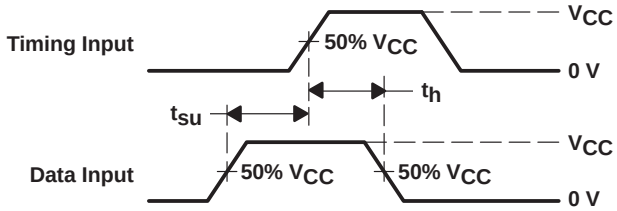

VOLTAGE WAVEFORMS
SETUP AND HOLD TIMES

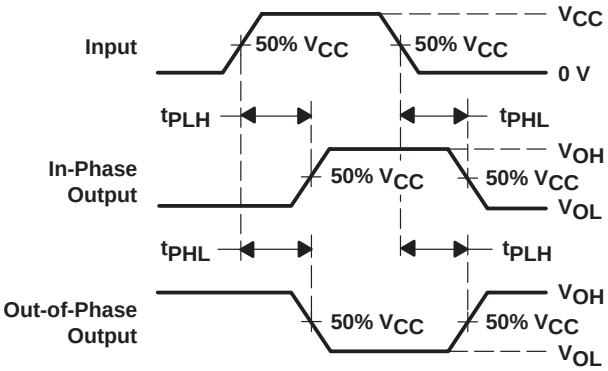

VOLTAGE WAVEFORMS
PROPAGATION DELAY TIMES
INVERTING AND NONINVERTING OUTPUTS

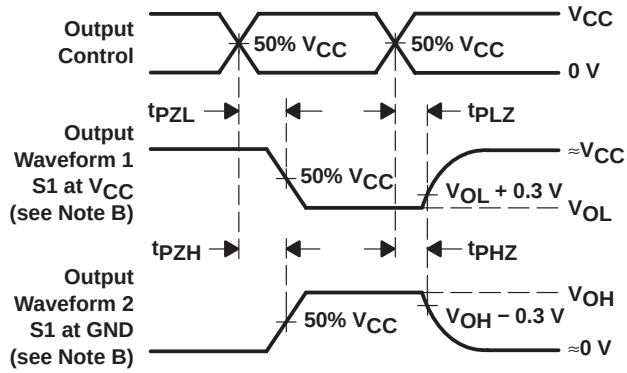

VOLTAGE WAVEFORMS
ENABLE AND DISABLE TIMES
LOW- AND HIGH-LEVEL ENABLING

NOTES: A. C_L includes probe and jig capacitance.
B. Waveform 1 is for an output with internal conditions such that the output is low, except when disabled by the output control. Waveform 2 is for an output with internal conditions such that the output is high, except when disabled by the output control.
C. All input pulses are supplied by generators having the following characteristics: PRR ≤ 1 MHz, Z_O = 50 Ω, t_r ≤ 3 ns, t_f ≤ 3 ns.
D. The outputs are measured one at a time, with one input transition per measurement.
E. All parameters and waveforms are not applicable to all devices.

Figure 1. Load Circuit and Voltage Waveforms

www.BDTIC.com/TI

PACKAGING INFORMATION

Orderable Device	Status [1]	Package Type	Package Drawing	Pins	Package Qty	Eco Plan [2]	Lead/Ball Finish	MSL Peak Temp [3]
SN74AHC1G04DBVR	ACTIVE	SOT-23	DBV	5	3000	Green (RoHS & no Sb/Br)	CU NIPDAU	Level-1-260C-UNLIM
SN74AHC1G04DBVRE4	ACTIVE	SOT-23	DBV	5	3000	Green (RoHS & no Sb/Br)	CU NIPDAU	Level-1-260C-UNLIM
SN74AHC1G04DBVRG4	ACTIVE	SOT-23	DBV	5	3000	Green (RoHS & no Sb/Br)	CU NIPDAU	Level-1-260C-UNLIM
SN74AHC1G04DBVT	ACTIVE	SOT-23	DBV	5	250	Green (RoHS & no Sb/Br)	CU NIPDAU	Level-1-260C-UNLIM
SN74AHC1G04DBVTE4	ACTIVE	SOT-23	DBV	5	250	Green (RoHS & no Sb/Br)	CU NIPDAU	Level-1-260C-UNLIM
SN74AHC1G04DBVTG4	ACTIVE	SOT-23	DBV	5	250	Green (RoHS & no Sb/Br)	CU NIPDAU	Level-1-260C-UNLIM
SN74AHC1G04DCKR	ACTIVE	SC70	DCK	5	3000	Green (RoHS & no Sb/Br)	CU NIPDAU	Level-1-260C-UNLIM
SN74AHC1G04DCKRE4	ACTIVE	SC70	DCK	5	3000	Green (RoHS & no Sb/Br)	CU NIPDAU	Level-1-260C-UNLIM
SN74AHC1G04DCKRG4	ACTIVE	SC70	DCK	5	3000	Green (RoHS & no Sb/Br)	CU NIPDAU	Level-1-260C-UNLIM
SN74AHC1G04DCKT	ACTIVE	SC70	DCK	5	250	Green (RoHS & no Sb/Br)	CU NIPDAU	Level-1-260C-UNLIM
SN74AHC1G04DCKTE4	ACTIVE	SC70	DCK	5	250	Green (RoHS & no Sb/Br)	CU NIPDAU	Level-1-260C-UNLIM
SN74AHC1G04DCKTG4	ACTIVE	SC70	DCK	5	250	Green (RoHS & no Sb/Br)	CU NIPDAU	Level-1-260C-UNLIM
SN74AHC1G04DRLR	ACTIVE	SOT	DRL	5	4000	Green (RoHS & no Sb/Br)	CU NIPDAU	Level-1-260C-UNLIM
SN74AHC1G04DRLRG4	ACTIVE	SOT	DRL	5	4000	Green (RoHS & no Sb/Br)	CU NIPDAU	Level-1-260C-UNLIM

[1] The marketing status values are defined as follows:
ACTIVE: Product device recommended for new designs.
LIFEBUY: TI has announced that the device will be discontinued, and a lifetime-buy period is in effect.
NRND: Not recommended for new designs. Device is in production to support existing customers, but TI does not recommend using this part in a new design.
PREVIEW: Device has been announced but is not in production. Samples may or may not be available.
OBSOLETE: TI has discontinued the production of the device.

[2] Eco Plan - The planned eco-friendly classification: Pb-Free (RoHS), Pb-Free (RoHS Exempt), or Green (RoHS & no Sb/Br) - please check http://www.ti.com/productcontent for the latest availability information and additional product content details.
TBD: The Pb-Free/Green conversion plan has not been defined.
Pb-Free (RoHS): TI's terms "Lead-Free" or "Pb-Free" mean semiconductor products that are compatible with the current RoHS requirements for all 6 substances, including the requirement that lead not exceed 0.1% by weight in homogeneous materials. Where designed to be soldered at high temperatures, TI Pb-Free products are suitable for use in specified lead-free processes.
Pb-Free (RoHS Exempt): This component has a RoHS exemption for either 1) lead-based flip-chip solder bumps used between the die and package, or 2) lead-based die adhesive used between the die and leadframe. The component is otherwise considered Pb-Free (RoHS compatible) as defined above.
Green (RoHS & no Sb/Br): TI defines "Green" to mean Pb-Free (RoHS compatible), and free of Bromine (Br) and Antimony (Sb) based flame retardants (Br or Sb do not exceed 0.1% by weight in homogeneous material)

[3] MSL, Peak Temp. -- The Moisture Sensitivity Level rating according to the JEDEC industry standard classifications, and peak solder temperature.

Important Information and Disclaimer: The information provided on this page represents TI's knowledge and belief as of the date that it is

www.BDTIC.com/TI

provided. TI bases its knowledge and belief on information provided by third parties, and makes no representation or warranty as to the accuracy of such information. Efforts are underway to better integrate information from third parties. TI has taken and continues to take reasonable steps to provide representative and accurate information but may not have conducted destructive testing or chemical analysis on incoming materials and chemicals. TI and TI suppliers consider certain information to be proprietary, and thus CAS numbers and other limited information may not be available for release.

In no event shall TI's liability arising out of such information exceed the total purchase price of the TI part(s) at issue in this document sold by TI to Customer on an annual basis.

OTHER QUALIFIED VERSIONS OF SN74AHC1G04 :

- Automotive: SN74AHC1G04-Q1

NOTE: Qualified Version Definitions:

- Automotive - Q100 devices qualified for high-reliability automotive applications targeting zero defects

www.BDTIC.com/TI

TAPE AND REEL INFORMATION

REEL DIMENSIONS

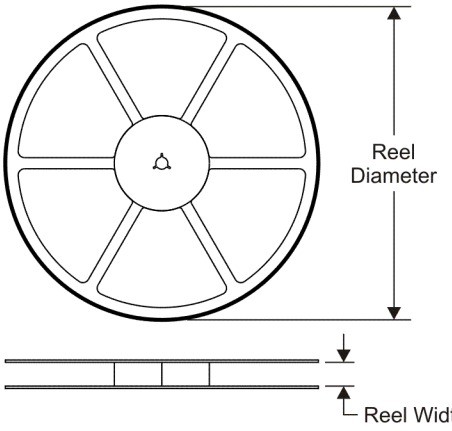

TAPE DIMENSIONS

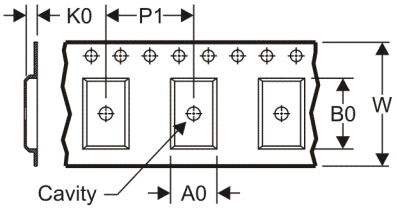

A0	Dimension designed to accommodate the component width
B0	Dimension designed to accommodate the component length
K0	Dimension designed to accommodate the component thickness
W	Overall width of the carrier tape
P1	Pitch between successive cavity centers

QUADRANT ASSIGNMENTS FOR PIN 1 ORIENTATION IN TAPE

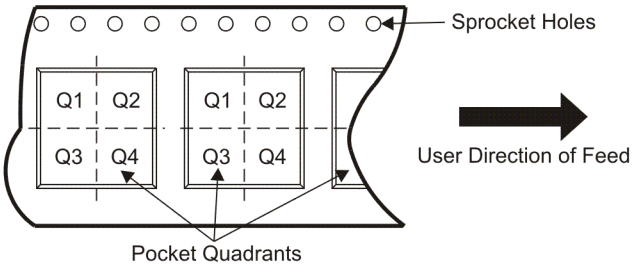

*All dimensions are nominal

Device	Package Type	Package Drawing	Pins	SPQ	Reel Diameter (mm)	Reel Width W1 (mm)	A0 (mm)	B0 (mm)	K0 (mm)	P1 (mm)	W (mm)	Pin1 Quadrant
SN74AHC1G04DBVR	SOT-23	DBV	5	3000	180.0	9.2	3.23	3.17	1.37	4.0	8.0	Q3
SN74AHC1G04DBVR	SOT-23	DBV	5	3000	178.0	9.0	3.23	3.17	1.37	4.0	8.0	Q3
SN74AHC1G04DBVT	SOT-23	DBV	5	250	178.0	9.0	3.23	3.17	1.37	4.0	8.0	Q3
SN74AHC1G04DBVT	SOT-23	DBV	5	250	180.0	9.2	3.23	3.17	1.37	4.0	8.0	Q3
SN74AHC1G04DCKR	SC70	DCK	5	3000	178.0	9.0	2.4	2.5	1.2	4.0	8.0	Q3
SN74AHC1G04DCKR	SC70	DCK	5	3000	180.0	9.2	2.24	2.34	1.22	4.0	8.0	Q3
SN74AHC1G04DCKT	SC70	DCK	5	250	180.0	9.2	2.24	2.34	1.22	4.0	8.0	Q3
SN74AHC1G04DCKT	SC70	DCK	5	250	178.0	9.0	2.4	2.5	1.2	4.0	8.0	Q3
SN74AHC1G04DRLR	SOT	DRL	5	4000	180.0	9.2	1.78	1.78	0.69	4.0	8.0	Q3

www.BDTIC.com/TI

TAPE AND REEL BOX DIMENSIONS

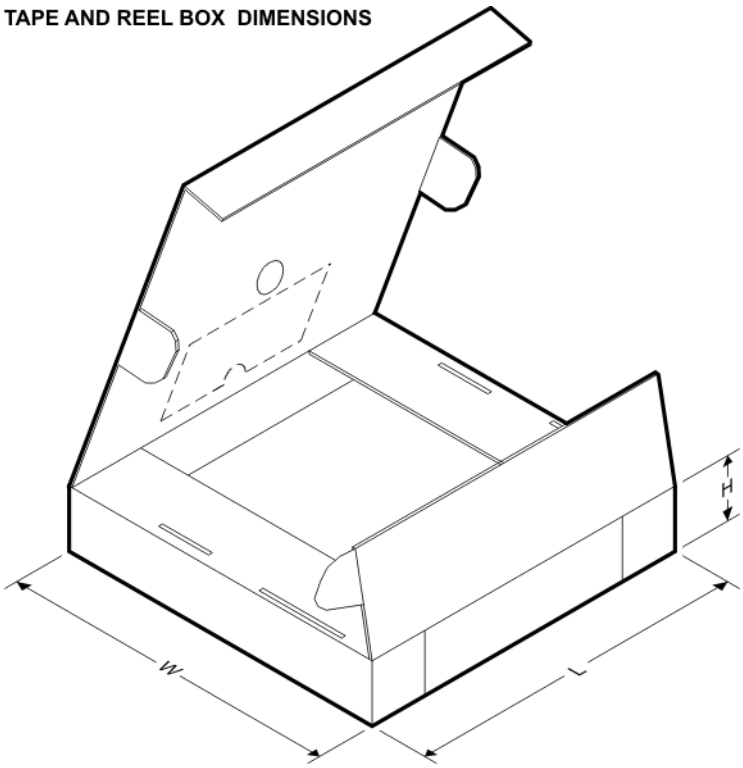

*All dimensions are nominal

Device	Package Type	Package Drawing	Pins	SPQ	Length (mm)	Width (mm)	Height (mm)
SN74AHC1G04DBVR	SOT-23	DBV	5	3000	205.0	200.0	33.0
SN74AHC1G04DBVR	SOT-23	DBV	5	3000	180.0	180.0	18.0
SN74AHC1G04DBVT	SOT-23	DBV	5	250	180.0	180.0	18.0
SN74AHC1G04DBVT	SOT-23	DBV	5	250	205.0	200.0	33.0
SN74AHC1G04DCKR	SC70	DCK	5	3000	180.0	180.0	18.0
SN74AHC1G04DCKR	SC70	DCK	5	3000	205.0	200.0	33.0
SN74AHC1G04DCKT	SC70	DCK	5	250	205.0	200.0	33.0
SN74AHC1G04DCKT	SC70	DCK	5	250	180.0	180.0	18.0
SN74AHC1G04DRLR	SOT	DRL	5	4000	202.0	201.0	28.0

www.BDTIC.com/TI

DBV (R–PDSO–G5) PLASTIC SMALL–OUTLINE PACKAGE

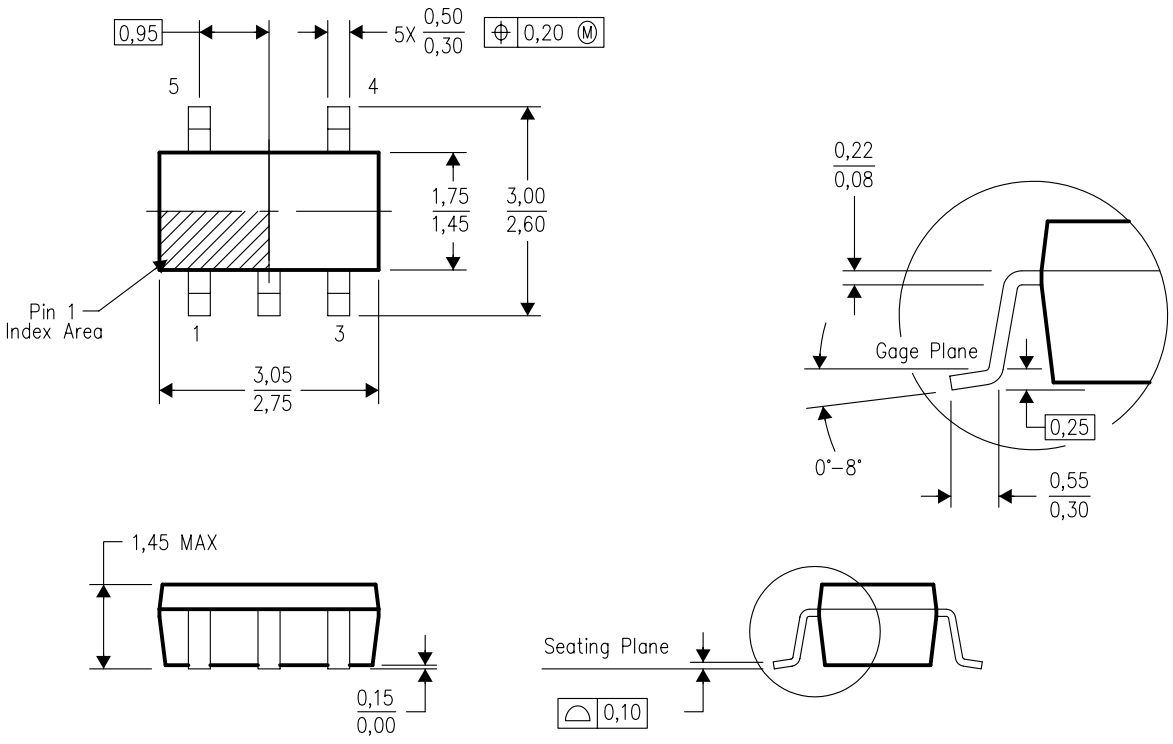

4073253–4/K 03/2006

NOTES:
A. All linear dimensions are in millimeters.
B. This drawing is subject to change without notice.
C. Body dimensions do not include mold flash or protrusion. Mold flash and protrusion shall not exceed 0.15 per side.
D. Falls within JEDEC MO–178 Variation AA.

www.BDTIC.com/TI

DCK (R–PDSO–G5) PLASTIC SMALL–OUTLINE PACKAGE

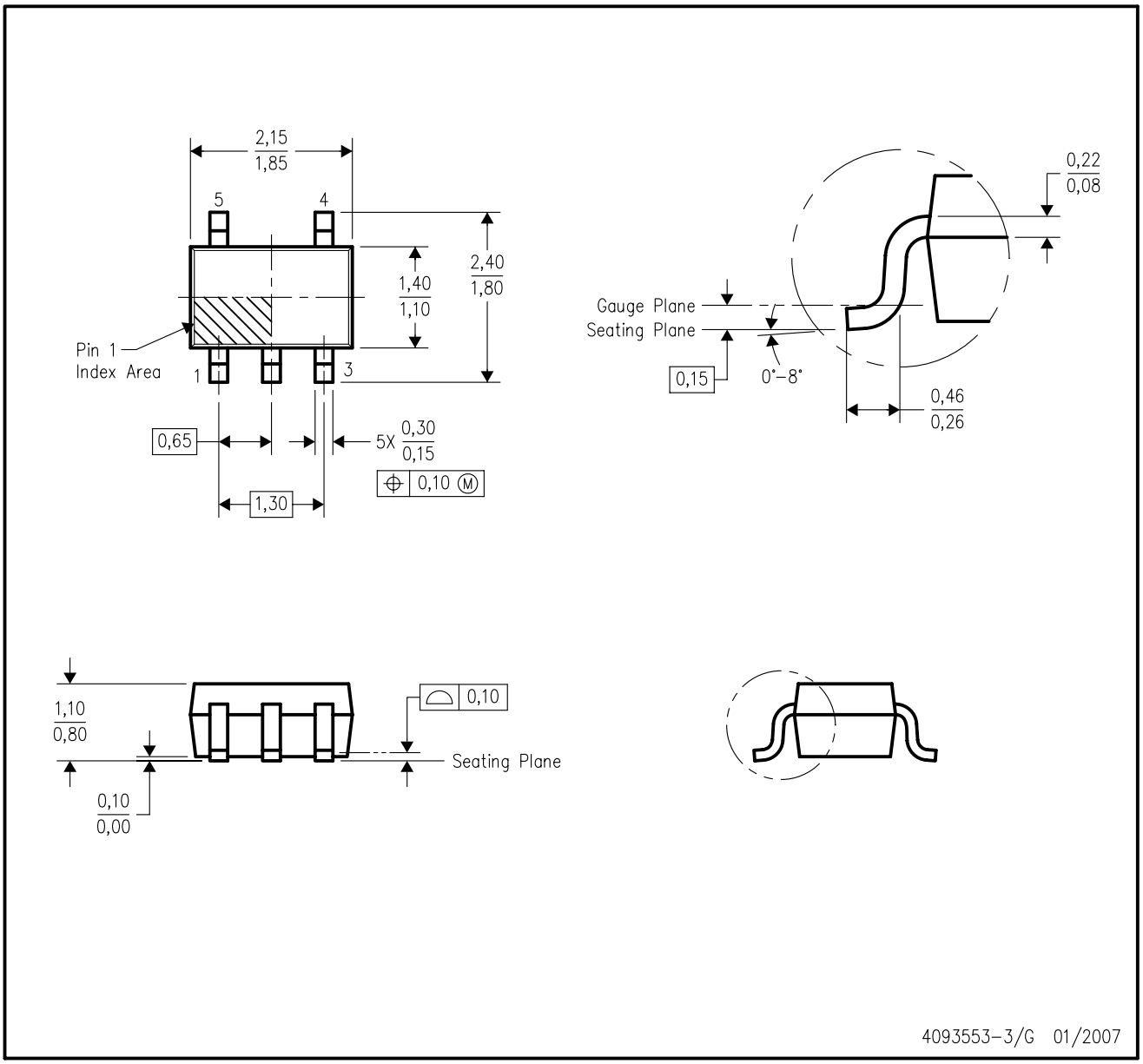

NOTES:
A. All linear dimensions are in millimeters.
B. This drawing is subject to change without notice.
C. Body dimensions do not include mold flash or protrusion. Mold flash and protrusion shall not exceed 0.15 per side.
D. Falls within JEDEC MO–203 variation AA.

www.BDTIC.com/TI

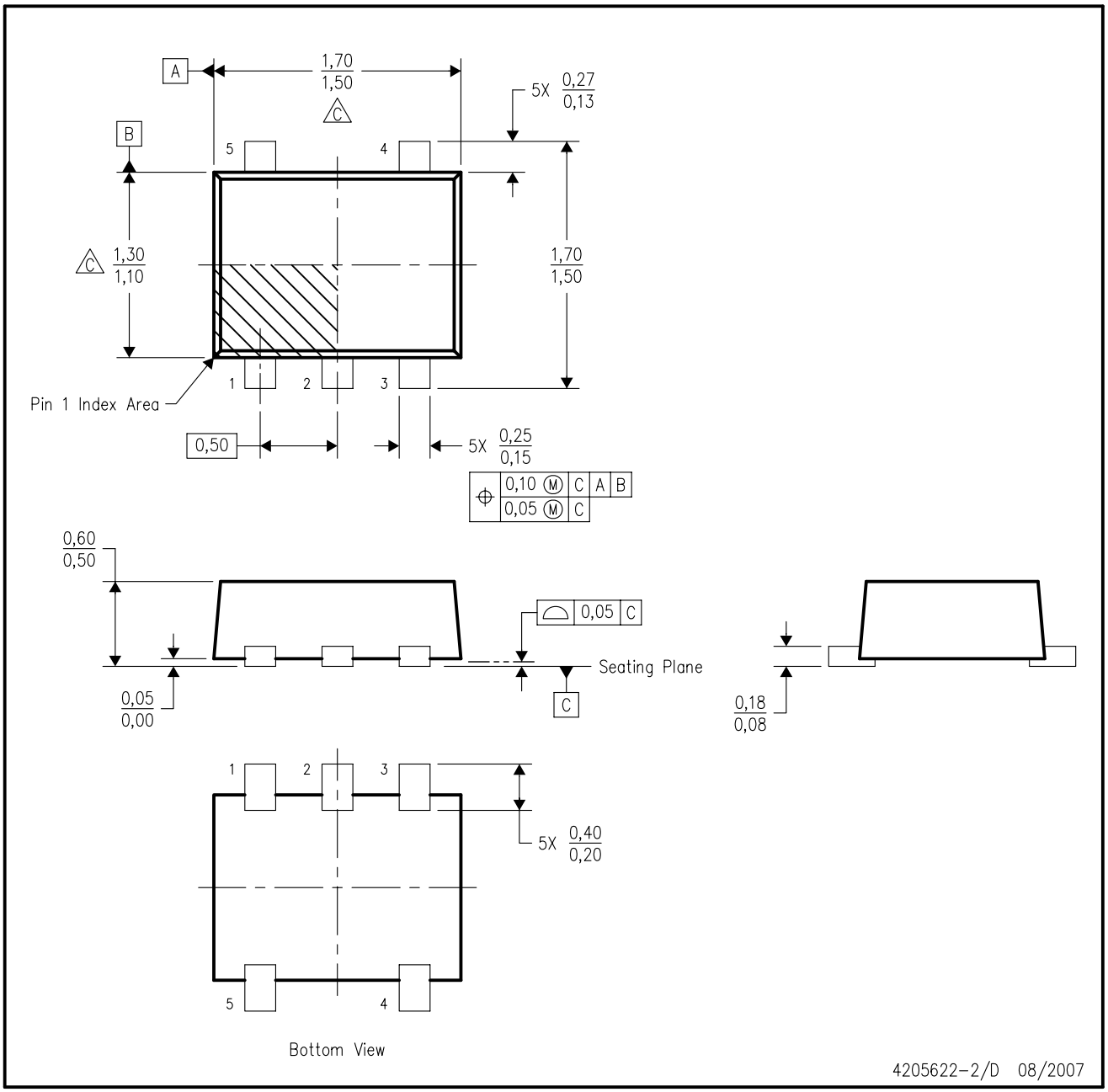

NOTES:
A. All linear dimensions are in millimeters. Dimensioning and tolerancing per ASME Y14.5M–1994.
B. This drawing is subject to change without notice.
C. Body dimensions do not include mold flash, interlead flash, protrusions, or gate burrs. Mold flash, interlead flash, protrusions, or gate burrs shall not exceed 0,15 per end or side.
D. JEDEC package registration is pending.

www.BDTIC.com/TI

DRL (R–PDSO–N5)

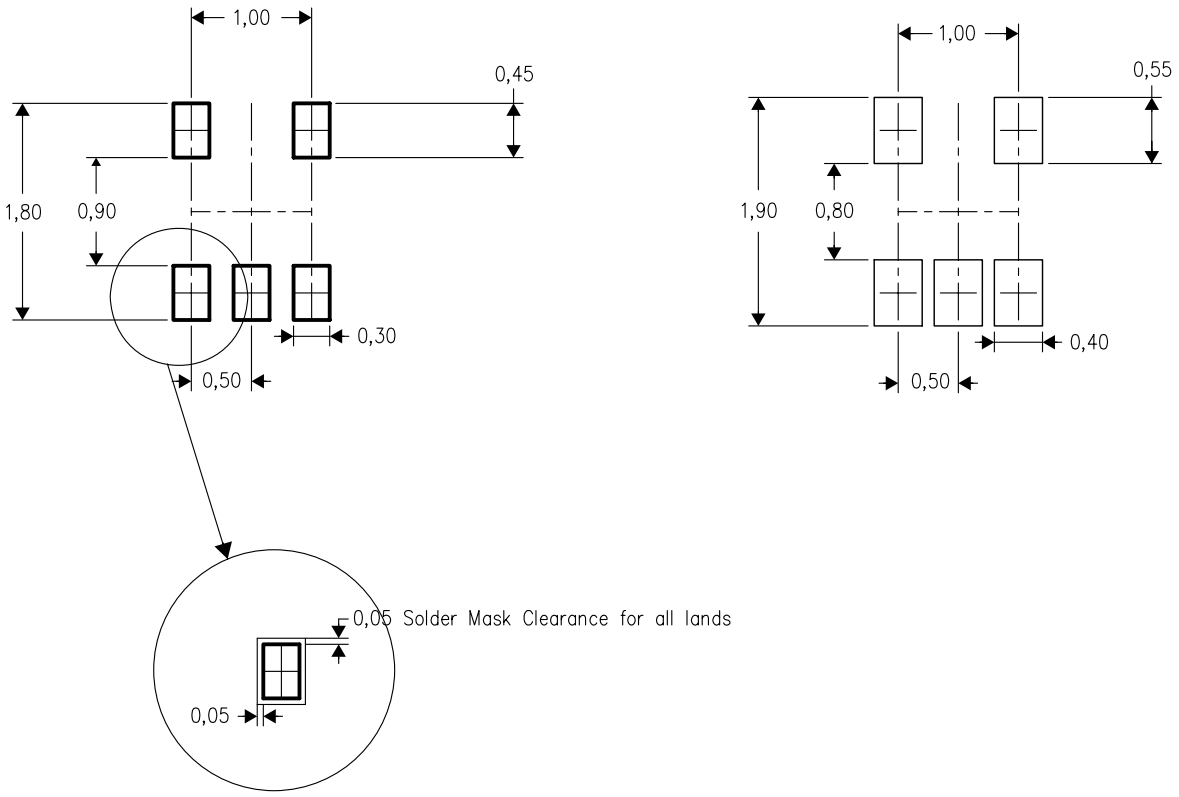

4208207–2/A 09/06

NOTES:
A. All linear dimensions are in millimeters.
B. This drawing is subject to change without notice.
C. Publication IPC–7351 is recommended for alternate designs.
D. Customers should contact their board fabrication site for minimum solder mask web tolerances between signal pads.
E. Maximum stencil thickness 0,127 mm (5 mils). All linear dimensions are in millimeters.
F. Laser cutting apertures with trapezoidal walls and also rounding corners will offer better paste release. Customers should contact their board assembly site for stencil design recommendations. Refer to IPC 7525 for stencil design considerations.
G. Side aperture dimensions over–print land for acceptable area ratio > 0.66. Customer may reduce side aperture dimensions if stencil manufacturing process allows for sufficient release at smaller opening.

www.BDTIC.com/TI

IMPORTANT NOTICE

Texas Instruments Incorporated and its subsidiaries (TI) reserve the right to make corrections, modifications, enhancements, improvements, and other changes to its products and services at any time and to discontinue any product or service without notice. Customers should obtain the latest relevant information before placing orders and should verify that such information is current and complete. All products are sold subject to TI's terms and conditions of sale supplied at the time of order acknowledgment.

TI warrants performance of its hardware products to the specifications applicable at the time of sale in accordance with TI's standard warranty. Testing and other quality control techniques are used to the extent TI deems necessary to support this warranty. Except where mandated by government requirements, testing of all parameters of each product is not necessarily performed.

TI assumes no liability for applications assistance or customer product design. Customers are responsible for their products and applications using TI components. To minimize the risks associated with customer products and applications, customers should provide adequate design and operating safeguards.

TI does not warrant or represent that any license, either express or implied, is granted under any TI patent right, copyright, mask work right, or other TI intellectual property right relating to any combination, machine, or process in which TI products or services are used. Information published by TI regarding third-party products or services does not constitute a license from TI to use such products or services or a warranty or endorsement thereof. Use of such information may require a license from a third party under the patents or other intellectual property of the third party, or a license from TI under the patents or other intellectual property of TI.

Reproduction of TI information in TI data books or data sheets is permissible only if reproduction is without alteration and is accompanied by all associated warranties, conditions, limitations, and notices. Reproduction of this information with alteration is an unfair and deceptive business practice. TI is not responsible or liable for such altered documentation. Information of third parties may be subject to additional restrictions.

Resale of TI products or services with statements different from or beyond the parameters stated by TI for that product or service voids all express and any implied warranties for the associated TI product or service and is an unfair and deceptive business practice. TI is not responsible or liable for any such statements.

TI products are not authorized for use in safety-critical applications (such as life support) where a failure of the TI product would reasonably be expected to cause severe personal injury or death, unless officers of the parties have executed an agreement specifically governing such use. Buyers represent that they have all necessary expertise in the safety and regulatory ramifications of their applications, and acknowledge and agree that they are solely responsible for all legal, regulatory and safety-related requirements concerning their products and any use of TI products in such safety-critical applications, notwithstanding any applications-related information or support that may be provided by TI. Further, Buyers must fully indemnify TI and its representatives against any damages arising out of the use of TI products in such safety-critical applications.

TI products are neither designed nor intended for use in military/aerospace applications or environments unless the TI products are specifically designated by TI as military-grade or "enhanced plastic." Only products designated by TI as military-grade meet military specifications. Buyers acknowledge and agree that any such use of TI products which TI has not designated as military-grade is solely at the Buyer's risk, and that they are solely responsible for compliance with all legal and regulatory requirements in connection with such use.

TI products are neither designed nor intended for use in automotive applications or environments unless the specific TI products are designated by TI as compliant with ISO/TS 16949 requirements. Buyers acknowledge and agree that, if they use any non-designated products in automotive applications, TI will not be responsible for any failure to meet such requirements.

Following are URLs where you can obtain information on other Texas Instruments products and application solutions:

Products		**Applications**	
Amplifiers	amplifier.ti.com	Audio	www.ti.com/audio
Data Converters	dataconverter.ti.com	Automotive	www.ti.com/automotive
DLP® Products	www.dlp.com	Communications and Telecom	www.ti.com/communications
DSP	dsp.ti.com	Computers and Peripherals	www.ti.com/computers
Clocks and Timers	www.ti.com/clocks	Consumer Electronics	www.ti.com/consumer-apps
Interface	interface.ti.com	Energy	www.ti.com/energy
Logic	logic.ti.com	Industrial	www.ti.com/industrial
Power Mgmt	power.ti.com	Medical	www.ti.com/medical
Microcontrollers	microcontroller.ti.com	Security	www.ti.com/security
RFID	www.ti-rfid.com	Space, Avionics & Defense	www.ti.com/space-avionics-defense
RF/IF and ZigBee® Solutions	www.ti.com/lprf	Video and Imaging	www.ti.com/video
		Wireless	www.ti.com/wireless-apps

Mailing Address: Texas Instruments, Post Office Box 655303, Dallas, Texas 75265
Copyright © 2010, Texas Instruments Incorporated

www.BDTIC.com/TI