Schematic for the NCV7680PWR22GEVB Evaluation Board

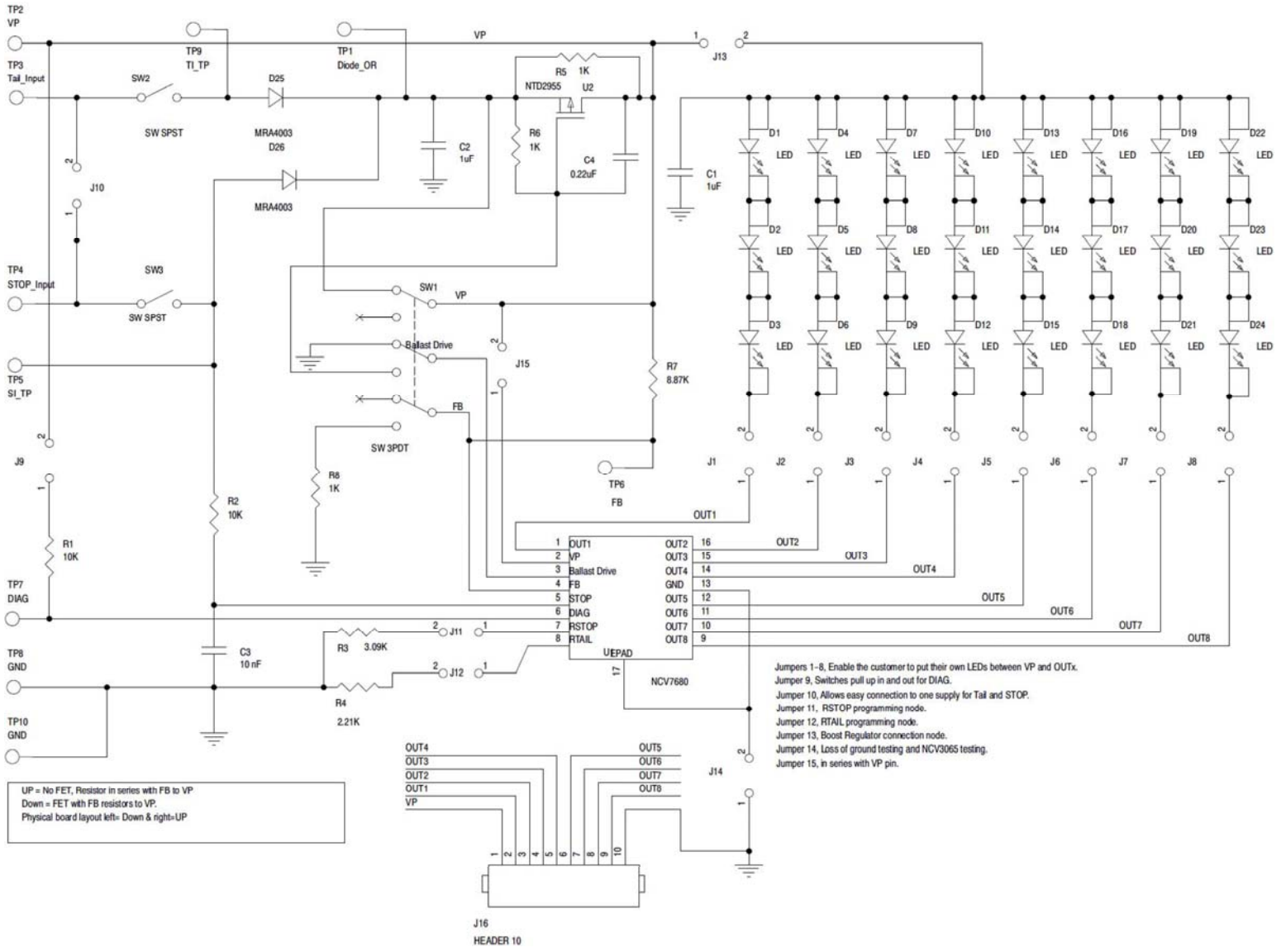

www.BDTIC.com/ON/