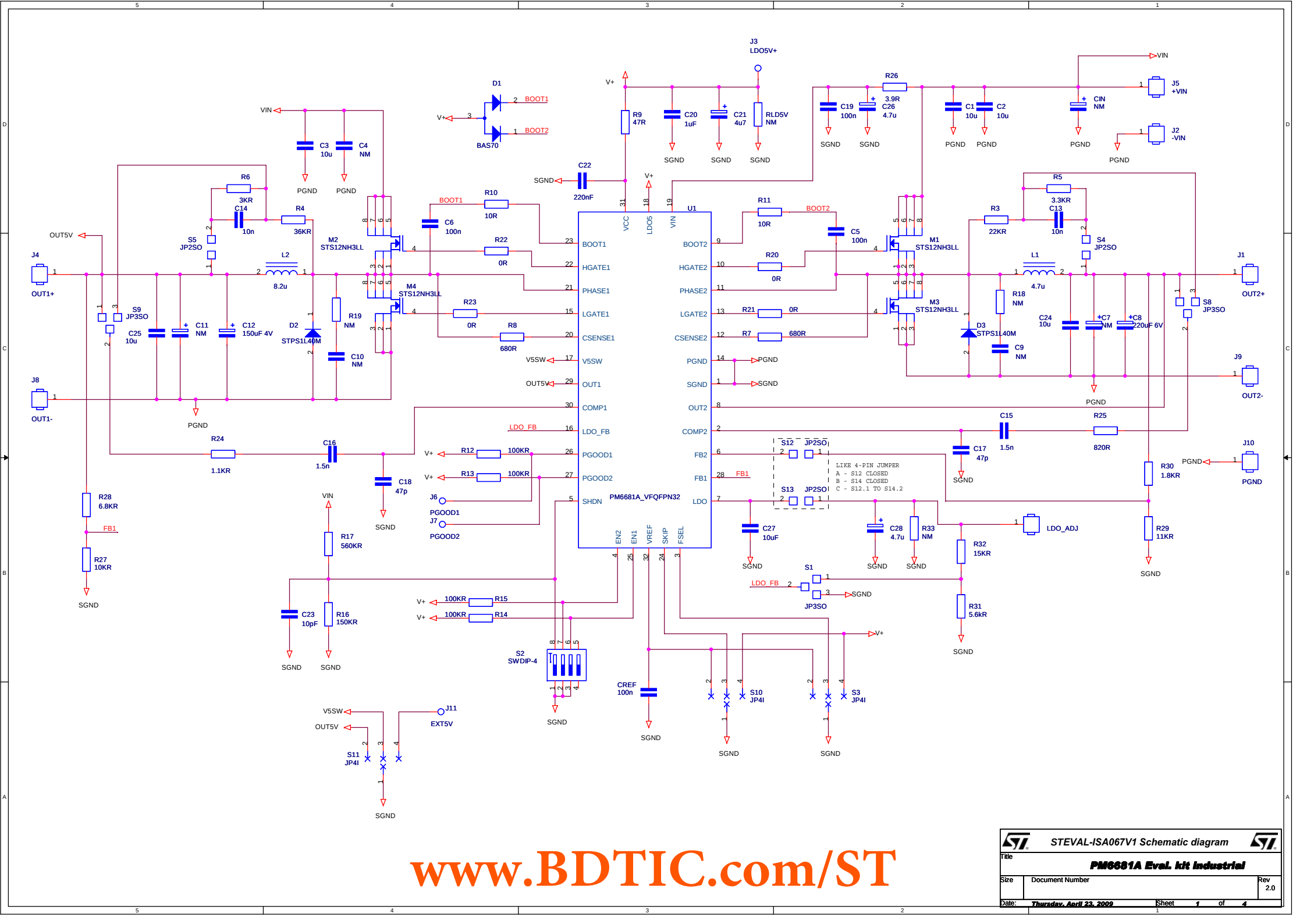
STEVAL-ISA067V1 Schematic diagram
PM6681A Eval. kit industrial
Title
Size
Document Number
Rev 2.0
Date: Thursday, April 23, 2009
Sheet 1 of 4
PM6681A_VFQFPN32
U1
J3 LDO5V+
J5 +VIN
J2 -VIN
J1 OUT2+
J9 OUT2-
J4 OUT1+
J8 OUT1-
J10 PGND
J6 PGOOD1
J7 PGOOD2
J11 EXT5V
LDO_ADJ
M1 STS12NH3LL
M2 STS12NH3LL
M3 STS12NH3LL
M4 STS12NH3LL
D1 BAS70
D2 STPS1L40M
D3 STPS1L40M
S2 SWDIP-4
LIKE 4-PIN JUMPER
A - S12 CLOSED
B - S14 CLOSED
C - S12.1 TO S14.2
www.BDTIC.com/ST