VIODC SDI Demonstration

User Guide

UG249 (v1.1) February 13, 2006

XILINX®

www.BDTIC.com/XILINX

Xilinx is disclosing this Document and Intellectual Property (hereinafter "the Design") to you for use in the development of designs to operate on, or interface with Xilinx FPGAs. Except as stated herein, none of the Design may be copied, reproduced, distributed, republished, downloaded, displayed, posted, or transmitted in any form or by any means including, but not limited to, electronic, mechanical, photocopying, recording, or otherwise, without the prior written consent of Xilinx. Any unauthorized use of the Design may violate copyright laws, trademark laws, the laws of privacy and publicity, and communications regulations and statutes.

Xilinx does not assume any liability arising out of the application or use of the Design; nor does Xilinx convey any license under its patents, copyrights, or any rights of others. You are responsible for obtaining any rights you may require for your use or implementation of the Design. Xilinx reserves the right to make changes, at any time, to the Design as deemed desirable in the sole discretion of Xilinx. Xilinx assumes no obligation to correct any errors contained herein or to advise you of any correction if such be made. Xilinx will not assume any liability for the accuracy or correctness of any engineering or technical support or assistance provided to you in connection with the Design.

THE DESIGN IS PROVIDED "AS IS" WITH ALL FAULTS, AND THE ENTIRE RISK AS TO ITS FUNCTION AND IMPLEMENTATION IS WITH YOU. YOU ACKNOWLEDGE AND AGREE THAT YOU HAVE NOT RELIED ON ANY ORAL OR WRITTEN INFORMATION OR ADVICE, WHETHER GIVEN BY XILINX, OR ITS AGENTS OR EMPLOYEES. XILINX MAKES NO OTHER WARRANTIES, WHETHER EXPRESS, IMPLIED, OR STATUTORY, REGARDING THE DESIGN, INCLUDING ANY WARRANTIES OF MERCHANTABILITY, FITNESS FOR A PARTICULAR PURPOSE, TITLE, AND NONINFRINGEMENT OF THIRD-PARTY RIGHTS.

IN NO EVENT WILL XILINX BE LIABLE FOR ANY CONSEQUENTIAL, INDIRECT, EXEMPLARY, SPECIAL, OR INCIDENTAL DAMAGES, INCLUDING ANY LOST DATA AND LOST PROFITS, ARISING FROM OR RELATING TO YOUR USE OF THE DESIGN, EVEN IF YOU HAVE BEEN ADVISED OF THE POSSIBILITY OF SUCH DAMAGES. THE TOTAL CUMULATIVE LIABILITY OF XILINX IN CONNECTION WITH YOUR USE OF THE DESIGN, WHETHER IN CONTRACT OR TORT OR OTHERWISE, WILL IN NO EVENT EXCEED THE AMOUNT OF FEES PAID BY YOU TO XILINX HEREUNDER FOR USE OF THE DESIGN. YOU ACKNOWLEDGE THAT THE FEES, IF ANY, REFLECT THE ALLOCATION OF RISK SET FORTH IN THIS AGREEMENT AND THAT XILINX WOULD NOT MAKE AVAILABLE THE DESIGN TO YOU WITHOUT THESE LIMITATIONS OF LIABILITY.

The Design is not designed or intended for use in the development of on-line control equipment in hazardous environments requiring fail-safe controls, such as in the operation of nuclear facilities, aircraft navigation or communications systems, air traffic control, life support, or weapons systems ("High-Risk Applications"). Xilinx specifically disclaims any express or implied warranties of fitness for such High-Risk Applications. You represent that use of the Design in such High-Risk Applications is fully at your risk.

© 2006 Xilinx, Inc. All rights reserved. XILINX, the Xilinx logo, and other designated brands included herein are trademarks of Xilinx, Inc. All other trademarks are the property of their respective owners.

Revision History

VIODC SDI Demonstration
UG249 (v1.1) February 13, 2006

The following table shows the revision history for this document.

	Version	Revision
02/07/06	1.0	Initial Xilinx release.
02/13/06	1.1	Added new two sentences to page 11.

www.BDTIC.com/XILINX

Contents

Preface: About This Guide

Guide Contents 9
Additional Resources 9
Conventions 9
Typographical 9
Online Document 10

Chapter 1: VIODC SDI Demonstration

Introduction 11
Running the Demo with the ML402 Board 12
Demo Modes 13
Transmitter Video Format and Pattern Selection 14
Running the Demo Without the ML402 Board 15
References 16

www.BDTIC.com/XILINX

www.BDTIC.com/XILINX

Schedule of Figures

Chapter 1: VIODC SDI Demonstration

Figure 1-1: **System-Level Block Diagram** 11
Figure 1-2: **Receiver Status Display on ML402 LCD** 12
Figure 1-3: **ML402 Push Button Functions** 12
Figure 1-4: **DIP Switch Settings** 15

www.BDTIC.com/XILINX

www.BDTIC.com/XILINX

Schedule of Tables

Chapter 1: VIODC SDI Demonstration

Table 1-1: **Demo Modes** 13
Table 1-2: **Transmitter Video Formats** 14
Table 1-3: **Transmitter Video Patterns** 14

www.BDTIC.com/XILINX

www.BDTIC.com/XILINX

About This Guide

The Serial Digital Interface (SDI) demonstration guide shows the capabilities of the SDI input and output interfaces on the Video Input and Output Daughter Card (VIODC).

Guide Contents

This manual contains the following chapter:

- Chapter 1, "VIODC SDI Demonstration" – provides details of the VIODC SDI demonstrations with and without the ML402 board.

Additional Resources

To find additional documentation, see the Xilinx website at:

http://www.xilinx.com/literature/index.htm.

To search the Answer Database of silicon, software, and IP questions and answers, or to create a technical support Web Case, see the Xilinx website at:

http://www.xilinx.com/support.

Conventions

This document uses the following conventions. An example illustrates each convention.

Typographical

The following typographical conventions are used in this document:

Convention	Meaning or Use	Example
`Courier font`	Messages, prompts, and program files that the system displays	`speed grade: - 100`
`Courier bold`	Literal commands that you enter in a syntactical statement	**`ngdbuild`** *design_name*
Helvetica bold	Commands that you select from a menu	**File → Open**
	Keyboard shortcuts	**Ctrl+C**

www.BDTIC.com/XILINX

Convention	Meaning or Use	Example
Italic font	Variables in a syntax statement for which you must supply values	**`ngdbuild`** *design_name*
	References to other manuals	See the *Development System Reference Guide* for more information.
	Emphasis in text	If a wire is drawn so that it overlaps the pin of a symbol, the two nets are *not* connected.
Square brackets [ ]	An optional entry or parameter. However, in bus specifications, such as **`bus[7:0]`**, they are required.	**`ngdbuild`** `[`*`option_name`*`]` *`design_name`*
Braces { }	A list of items from which you must choose one or more	**`lowpwr =`**`{`**`on`**`|`**`off`**`}`
Vertical bar |	Separates items in a list of choices	**`lowpwr =`**`{`**`on`**`|`**`off`**`}`

Vertical ellipsis
.
.
.
	Repetitive material that has been omitted	`IOB #1: Name = QOUT'`
		`IOB #2: Name = CLKIN'`
		.
		.
		.

Horizontal ellipsis . . .	Repetitive material that has been omitted	**`allow block`** *block_name loc1 loc2 ... locn;*

Online Document

The following conventions are used in this document:

Convention	Meaning or Use	Example
Blue text	Cross-reference link to a location in the current document	See the section "Additional Resources" for details. Refer to "Title Formats" in Chapter 1 for details.
Red text	Cross-reference link to a location in another document	See Figure 2-5 in the *Handbook*.
Blue, underlined text	Hyperlink to a website (URL)	Go to http://www.xilinx.com for the latest speed files.

www.BDTIC.com/XILINX

Chapter 1

VIODC SDI Demonstration

Introduction

The SDI demonstration shows the capabilities of the SDI input and output interfaces on the Video Input and Output Daughter Card (VIODC). (The VSK is a demonstration platform only. For HD-SDI verification and compliance, Xilinx recommends using the Cook Technologies SDV board). The demo can transmit and receive various digital video formats, both high-definition (HD) and standard-definition (SD) using the SDI receiver and transmitter on the VIODC. Digital video received through the SDI receiver is checked for errors and then sent to the video encoder chip to be output as analog video. The SDI transmitter is independent of the SDI receiver and is driven by digital video pattern generators in the Virtex™-II Pro FPGA on the VIODC.

Note: This demo does not use a recovered clock from the recieved video data stream and, therefore, cannot be used to pass received video data to the transmitter.

This demo can be used with or without an ML402 board. If the VIODC is attached to an ML402 board, the LCD and push buttons on the ML402 can be used to control the SDI demo and monitor the status of the demo. When the ML402 board is not used, DIP switches on the VIODC are used to control the demo, and the LEDs on the VIODC are used to monitor the status of the demo. Figure 1-1 shows a system-level block diagram of the demo.

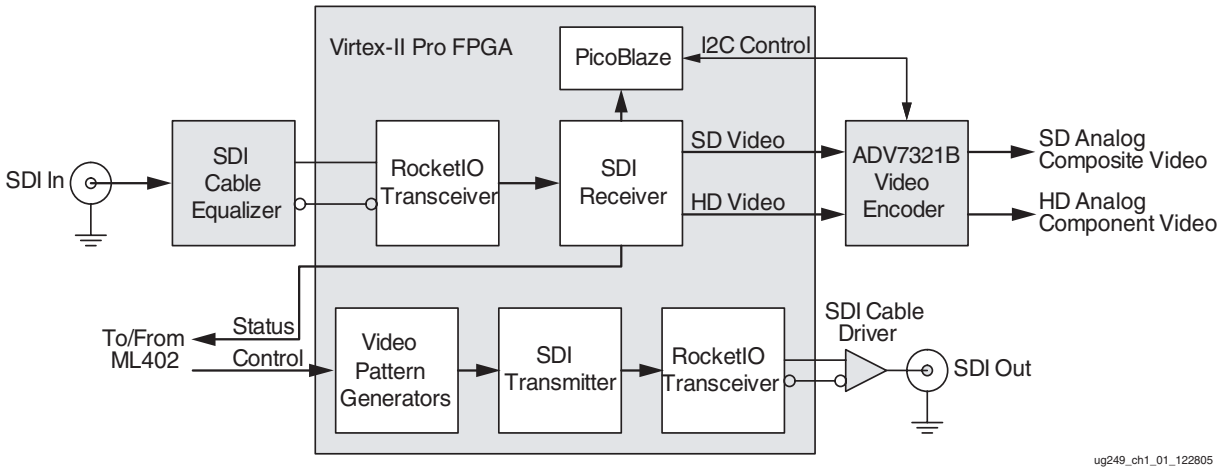

Figure 1-1: **System-Level Block Diagram**

SD-SDI is defined by the SMPTE 259M standard [Ref 1] and also by the equivalent ITU-R BT.656 standard [Ref 2]. SD-SDI is widely used in broadcast studios and video production centers to transport uncompressed standard definition digital video serially over coax cable. HD-SDI is defined by the SMPTE 292M standard and is used to transport

www.BDTIC.com/XILINX

uncompressed high definition digital video serially over coax cable. The HD-SDI and SD-SDI standards are similar enough that they can be implemented using the same physical interface components, connectors, and cables. The SDI receiver and transmitter on the VIODC support both HD-SDI and SD-SDI.

Running the Demo with the ML402 Board

When running the demo with the VIODC attached to the ML402 board, the LCD on the ML402 board is used to monitor the status of the demo. The push buttons on the ML402 are used to control the demo using menus and prompts displayed on the LCD.

Normally, the LCD on the ML402 board displays the receiver status. The receiver status information on the LCD display gives the following information:

- Whether the receiver is locked or unlocked.
- Whether the SDI receiver is running in SD-SDI mode or HD-SDI mode.
- The format of the incoming video.
- In HD-SDI mode, whether the incoming bit stream is running at 1.485 Gb/s or 1.4835 Gb/s.
- The number of received video frames with detectable errors.

Figure 1-2 shows what the receiver status display looks like on the ML402 LCD. The receiver status information is shown on the LCD display except when user selection menus temporarily replace it after a push button is pushed. Note that the error counter is shown in hex in order to squeeze all 24-bits of the error counter into the space available on the LCD.

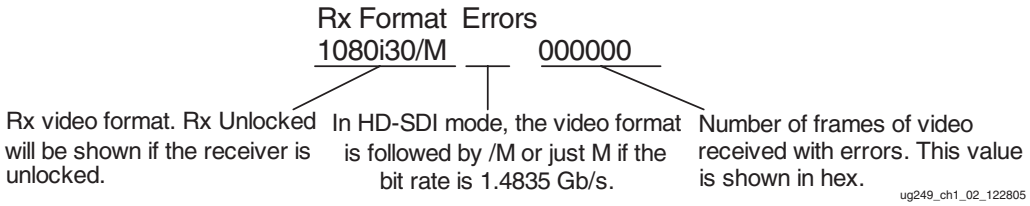

Figure 1-2: **Receiver Status Display on ML402 LCD**

The five push buttons on the ML402 board are used to control the demo. Their assigned functions are shown in Figure 1-3. Pushing the center push button causes a brief help

www.BDTIC.com/XILINX

message to be displayed on the LCD. More detailed explanations of the functions of the other push buttons are found in the sections below.

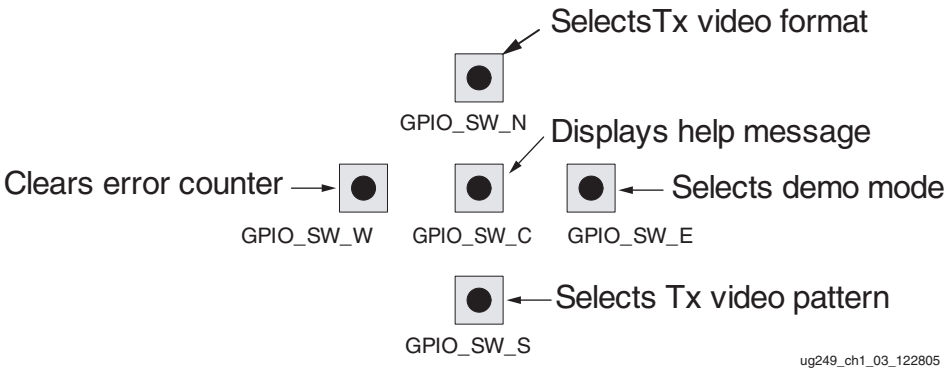

Figure 1-3: **ML402 Push Button Functions**

www.BDTIC.com/XILINX

Demo Modes

The SDI receiver and transmitter sections are mostly independent of each other. The video received by the SDI receiver is not retransmitted by the SDI transmitter. The video sources for the SDI transmitter are video pattern generators in the Virtex-II Pro FPGA. However, there is only one clock generator on the VIODC capable of generating the clock frequencies needed to implement the SDI interfaces, and it can only produce one clock frequency at a time. Thus, the SDI receiver and transmitter must operate at the same bit rate. There are three different bit rates supported in this demo: SD (270 Mb/s), HD (1.485 Gb/s), and HD/M[1] (1.4835 Gb/s).

The user can choose to have the receiver automatically detect the bit rate of the incoming SDI bit stream and lock to it, forcing the transmitter to operate at the same bit rate as the receiver. This is called the Auto Rx mode. Or, the user can manually specify which of the three bit rates is to be used by the SDI transmitter and receiver, keeping in mind that the transmitter and receiver both operates at the bit rates selected. Table 1-1 summarizes the four operating modes of the VIODC SDI demo.

The *east* push button on the ML402 board is used to select the demo mode. Pushing this button once displays the current demo mode on the LCD for a period of about 3 seconds. During the time that the demo mode is displayed, pushing the east push button again changes the demo mode to the next mode. Repeatedly pushing the east push button cycles through the four different operating modes shown in Table 1-1.

Table 1-1: **Demo Modes**

Mode	SDI Bit Rate	Comments
Auto Rx	Any	SDI Rx automatically detects incoming bit rate. SDI Tx runs at the same rate as the SDI Rx.
Manual HD	1.485 Gb/s	Forces the SDI Rx and Tx to run in HD-SDI mode at 1.485 Gb/s. SDI Rx will not lock to any bit rates except 1.485 Gb/s.
Manual HD/M	1.4835 Gb/s	Forces the SDI Rx and Tx to run in HD-SDI mode at 1.4835 Gb/s. SDI Rx will not lock to any bit rates except 1.4835 Gb/s.
Manual SD	270 Mb/s	Forces the SDI Rx and Tx to run in SD-SDI mode at 270 Mb/s. SDI Rx will not lock to any bit rates except 270 Mb/s.

When running in Auto Rx mode and there is no SDI bit stream connected to the SDI input or the SDI receiver cannot lock to the input bit stream, then the SDI receiver continuously tries to lock to the input bitstream by sequencing through the three bit rates until the receiver locks. This causes the SDI transmitter to also rapidly sequence through the three bit rates, causing the SDI output to be invalid. If the user is using the SDI transmitter without a valid SDI input bit stream connected to the SDI input, the user should place the demo in the appropriate manual mode to get a stable SDI output signal.

1. M is commonly used in the broadcast industry to denote the value 1.001. So, the two HD-SDI bit rates are 1.485 Gb/s and 1.485/1.001 Gb/s, alternately written as 1.485/M Gb/s, which is approximately 1.4835 Gb/s. The frame rates of the various HD video formats also use M to denote the same 1.001 factor. Some HD video frame rates are exactly 60 Hz, 30 Hz, or 24 Hz. In addition, there are standard HD video frame rates of 60/M Hz, 30/M Hz, and 24/M Hz.

www.BDTIC.com/XILINX

The Auto Rx mode is used when the primary interest is the SDI receiver section. Manual modes should be used when the interest is in the SDI transmitter, especially if there is no SDI signal connected to the SDI receiver input.

The SDI output can be looped back to the SDI input by using a coax cable between the two BNC connectors. This allows the SDI transmitter output to be received by the SDI receiver, checked for errors, and output as analog video through the video encoder chip.

Transmitter Video Format and Pattern Selection

The video pattern generators in this demo can generate a number of common HD and SD video formats and several different video patterns. Table 1-2 shows the video formats that can be generated and Table 1-3 shows the video patterns. Note that when the transmitter is in SD mode, either because the demo is in Auto Rx mode and the incoming bit stream is an SD-SDI bit stream or because the Manual SD mode is selected, only the SD video formats and patterns are selectable. Likewise, when the transmitter is running in HD mode, only the HD formats and patterns are selectable. The ML402 remembers the most current selection of video format and pattern for both HD and SD and when the demo switches from HD to SD, for example, the last selected SD transmitter video format and pattern is restored.

Table 1-2: **Transmitter Video Formats**

Format	HD/SD	Specification	Active Resolution	Scan Mode	Frame Rate
720p60	HD	SMPTE 296M	1280 x 720	progressive	60 Hz[1]
720p50	HD	SMPTE 296M	1280 x 720	progressive	50 Hz
1080sF24	HD	RP 211	1920 x 1080	segmented frame	24 Hz*
1080i30	HD	SMPTE 274M	1920 x 1080	interlaced	30 Hz*
1080i25	HD	SMPTE 274M	1920 x 1080	interlaced	25 Hz
1080p30	HD	SMPTE 274 M	1920 x 1080	progressive	30 Hz*
1080p25	HD	SMPTE 274M	1920 x 1080	progressive	25 Hz
1080p24	HD	SMPTE 274M	1920 x 1080	progressive	24 Hz*
NTSC	SD	SMPTE 125M	1440 x 487	interlaced	29.97 Hz
PAL	SD	ITU-R BT.601	1440 x 574	interlaced	25 Hz

Notes:

1. Update rate divided by 1.001 is also supported.

Table 1-3: **Transmitter Video Patterns**

Pattern	HD/SD	Description
75% color bars	HD	Standard color bars
RP 219 color bars with logo	HD	SMPTE RP 219 color bar pattern with Xilinx logo
RP 219 color bars	HD	SMPTE RP 219 color bar pattern
HD-SDI checkfield	HD	HD-SDI pathological test pattern

www.BDTIC.com/XILINX

Table 1-3: **Transmitter Video Patterns *(Continued)***

Pattern	HD/SD	Description
SMPTE EG-1 color bars	SD	Standard SMPTE EG-1 color bars
SD-SDI checkfield	SD	SD-SDI pathological test pattern

The transmitter video format can be changed by pushing the *north* push button on the ML402 board. Pushing this button once causes the current transmitter video format to be displayed on the LCD for three seconds. Pushing the north push button again while the transmitter video format is displayed changes the video format to the next video format. Repeatedly pushing the north push button cycles through all possible transmitter video formats.

The transmitter video pattern can be changed by pushing the *south* push button on the ML402 board. As with the video format selection, pushing this button once causes the name of the current video pattern to be displayed for three seconds and pushing the button again changes the video pattern.

Running the Demo Without the ML402 Board

When running the demo without the ML402 board, DIP switches on the VIODC are used to select the demo mode and the transmitter video format and pattern. LEDs on the VIODC provide some status information.

DIP switch 8 must be in the OFF position for the other DIP switches on the VIODC to control the demo mode, transmitter format, and transmitter mode selection. When DIP switch 8 is ON, the VIODC expects the ML402 board to provide control signals to the demo. The function of the various DIP switches is shown in Figure 1-4. See the previous section for more descriptions of the demo modes, transmitter video formats, and transmitter video patterns.

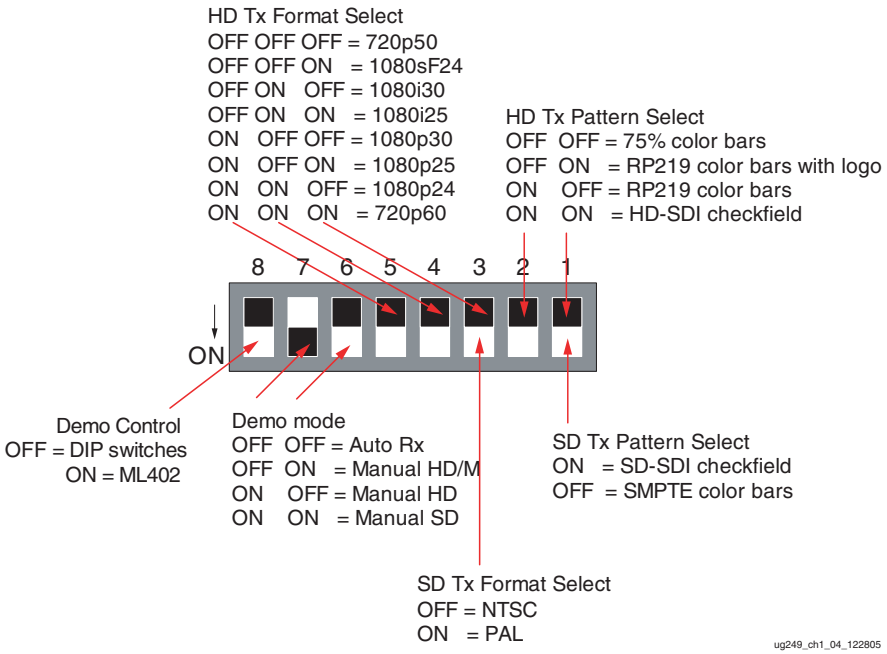

Figure 1-4: **DIP Switch Settings**

www.BDTIC.com/XILINX

The red LED, labeled DS1 on the VIODC is illuminated whenever the receiver is unlocked. It also flashes on for about half a second when a receiver error is detected.

Three green LEDs on the VIODC indicate other demo status information. DS3 is illuminated whenever the SDI receiver is locked. DS5 indicates whether the demo is running in SD mode (LED on) or HD mode (LED off). And, DS6 indicates the HD bit rate: 1.485 Gb/s (LED on) or 1.4835 Gb/s (LED off). In Auto Rx mode, DS5 and DS6 indicate the rate determined by the automatic rate selection logic as it examines the incoming SDI bit stream. In any of the manual modes, DS5 and DS6 simply indicate the proper values as determined by the demo mode.

References

1. All the SMPTE standards referenced in this user guide are available from the Society of Motion Picture and Television Engineers. These standards can be purchased at the SMPTE website. http://www.smpte.org
2. The ITU-R BT.601-5 standard can be purchased from the International Telecommunication Union at http://www.itu.int/itudoc/itu-r/rec/bt/

www.BDTIC.com/XILINX

www.BDTIC.com/XILINX